POWER TEAM®

Professional Construction Pumps, Cylinders, Jacks & Accessories

PT503M

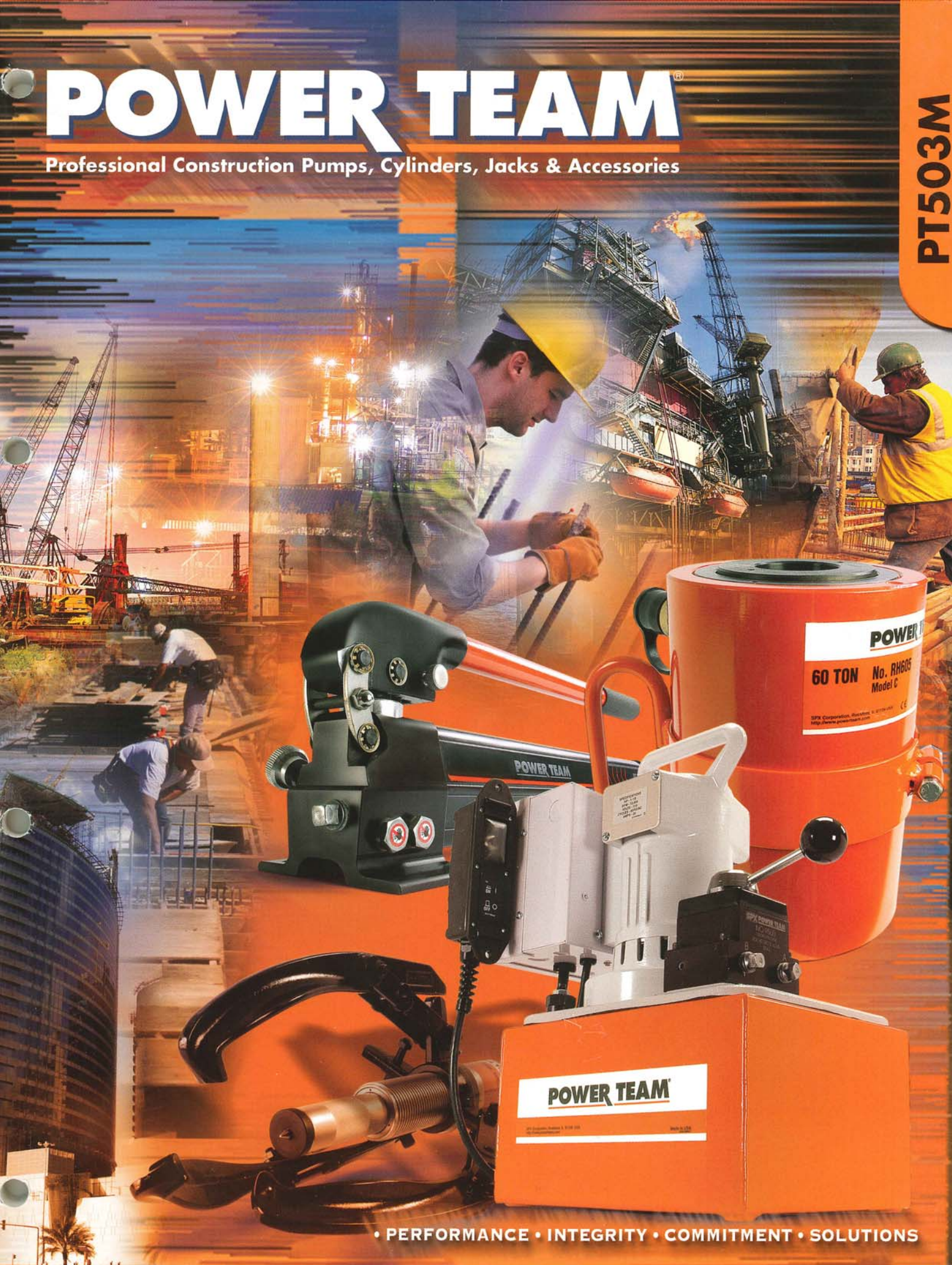

• PERFORMANCE • INTEGRITY • COMMITMENT • SOLUTIONS

Index
NUMERICAL

Index
ALPHABETICAL

Pump Capacity
SELECTION CHART

Choosing the Right Pump

The Following guidelines are for general lifting and construction applications. Hydraulic tools, pullers and presses may fall outside these recommendations. Always check to see that the pump's "usable reservoir capacity" exceeds the cylinder(s) oil Capacity.

Generally Recommended	Marginal Check Requirements	Not Recommended for most applications

700 bar Maximum Working Pressure

	Page No.		PRESSURE STAGE	Cylinder Capacity (Tons) 5	10	15	20	25	30	55	75	100	150	200	300	400	500
Hand Pumps*	52	P12‡	Single	14	32	44	65	72	93								
	52	P55‡	Single	6	14	19	28	31	40	71							
	53	P19/ P19L	Low	4	8	10	15	17	21								
			High	13	30	42	59	68	86								
	53	P59F	Low	1,8	4,1	5,7	8	9	12	20	29						
			High	8	17	24	3	48	50	85	122						
	53	P59(L)‡	Low	1,5	3,2	4,7	7	7,7	9,7	16,7	23,9						
	54	P157‡	High	6	14	19	28	31	40	71	101						
	54	P159‡	Low	,5	1	1,3	1,9	2,2	2,8	5	7	9	13	18			
	54	P300‡	High	7	15	21	30	34	43	77	110	143	200	250			
	54	P460‡	Low	,1	,3	,6	,6	,7	,9	1,5	2,2	2,8	4,2	5,6	8,4	11,2	
			High	3,3	7,7	9	14	17,5	22	37	55	71	105	143	213	284	
Electric/ Hydraulic Pumps†	70	PE10	Low	,5	1,2	1,6	2,2	2,6	3,2	5,5							
			High	6	13,4	18,9	27	31	39	66,2							
	72	PE17‡	Low	,2	,5	,7	,9	1,1	1,4	2,3	3,3	4,3	6,5	8,7			
			High	3,5	7,9	10,9	16	18	23	39	56,3	73	109	146			
	74-75	PE18	Low	,4	,8	1,2	1,6	1,8	2,3	3,9	5,7	7,3	10,8	14,6	21,9	29,2	
			High	3,3	7,5	10,3	15	17	21	37	53	69	102	136	207	276	
	76-77	PE21‡	Low	,2	,5	,7	1,0	1,1	1,4	2,5	3,6	4,6	6,8	9,2	13,8	18,4	
			High	2,8	6,4	9	13	15	19	32	45,5	59	88	118	177	236	
	78-79	PED25	Low	,2	,4	,6	,9	1,0	1,3	2,2	3,2	4,1	6,1	8,3	12,0	15,7	19,9
			High	2,4	5,4	7,5	10,6	12,4	15,6	26,5	38,2	49,5	73,6	99,1	144,3	188,5	238,6
	80-81	PE30‡	Low	,2	,45	,6	,9	1	1,3	2,2	3,2	4,1	6				
			High	2	4,5	6	9	10	13	22	32	41	60				
	82-83	PE46‡	Low	,1	,3	,4	,5	,6	,7	1,3	1,8	2,4	3,5	4,7	7,2	9,6	
			High	1,3	2,9	4,1	5,9	6,8	8,6	14	22	28	42	56	84	112	
	84-85	PE55‡	Low	,1	,2	,3	,4	,4	,6	,9	1,4	1,8	2,6	3,5	5,4	7,2	
	86-87	PE60‡	High	1,1	2,4	3,4	4,8	5,6	7,1	12	17,8	23	34	45	69	92	
	88-89	PQ60	Low	,1	,2	,3	,4	,4	,5	,9	1,3	1,7	2,5	3,4	5,1	6,8	8,5
			High	1	2,2	3,3	4,4	5,2	6,5	11	16,2	21	31	41	63	84	105
	90-91	PQ120	Low	,1	,2	,3	,4	,4	,5	,9	1,3	1,7	2,5	3,4	5,1	6,8	8,5
			High	,5	1,1	1,6	2,2	2,6	3,2	5,5	7,7	10	15	21	30	40	50
	92-93	PE400	Low	,1	,1	,2	,2	,3	,3	,6	,8	1	1,5	2,1	3	4	5
			High	,1	,3	,4	,6	,7	,9	1,6	2,2	2,9	4,4	5,9	8,7	11,6	14,5
Air/Hydraulic Pumps†	56-59	PA6‡	Single	10	22,4	31	44,4	51,3	65,2	-	-	-	-	-			
	60-61	PA9‡	Single	10	22,4	31	44,4	51,3	65,2	-	-	-	-	-			
	66-67	PA17‡	Low	,2	,5	,7	,9	1,1	1,4	2,3	3,3	4,3	6,5	8,7	-	-	
			High	3,5	7,9	10,9	16	18	23	39	56	73	109	146			
	68-69	PA46‡	Low	,1	,3	,4	,5	,6	,7	1,3	2	2,4	3,5	4,7	7,2	9,6	
			High	1,3	2,9	4,1	5,9	6,8	8,6	14	22	28	56	42	84	112	
	68-69	PA55‡	Low	,1	,3	,4	,6	,7	,9	1,5	2,2	2,8	4,1	5,5	8,4	11,2	
			High	1,1	2,4	3,4	4,8	5,6	7,1	12	18	23	34	45	69	92	
Gas/Hydraulic Pumps†	96-97	PG30	Low	,3	,7	1	1,3	1,6	2	3,3	4,8	6,2	9,3	12,4	18,1	-	
			High	2	4,5	6,3	8,9	10,3	13	22	31,8	41,3	61,4	83	121	-	
	96-97	PG55‡	Low	,1	,3	,4	,6	,7	,8	1,4	2	2,6	3,9	5,2	7,6	9,9	12,5
			High	1,1	2,5	3,5	4,9	5,6	7,1	12,1	17,3	22,5	33,5	45	66	86	109
	98-99	PG120‡	Low	,1	,3	,4	,6	,7	,8	1,4	2	2,6	3,9	5,2	7,6	9,9	12,5
			High	,5	1,0	1,5	2,0	2,4	3,0	5,1	7,3	9,5	14,2	19,1	27,8	36,3	46,0
	92-93	PG400	Low	,1	,1	,2	,2	,3	,3	,6	,8	1,0	1,5	2,0	3,0	3,8	4,9
			High	,2	,3	,5	,7	,8	1,0	1,7	2,4	3,1	4,6	6,2	9,0	11,8	15,0

‡ Some Power Team pumps are available in special configurations not listed in this catalog. Power Team can "Assemble to order" pumps with special seals, voltages, valves, relief valve settings, etc. Tor your special requirements please consult your local distributor or the Power Team factory.

* Hand Pumps = Number of strokes required to move piston 25,4 mm. † Air, Electric and Gasoline Engine/Hydraulic pumps = Number of seconds required to move piston 25,4 mm.

POWER TEAM

Cylinder
SELECTION CHART

Choosing the Right Cylinder
Tonnage, stroke and retracted height

	Stroke (mm)	Re-tracted Height (mm)	Order No.	Page No.
2ton pull	127	233	RP25	23
5ton pull	139,7	302	RP55	23
5 ton	14,3	41	RLS50	18
	25,4	111	C51C	15
	82,6	165	C53C	15
	133,4	216	C55C	15
	133,4	267	C55CBT	16
	184,2	273	C57C	15
	235	324	C59C	15
10 ton	11,1	45	RLS100	18
	25,4	92	C101C	15
	38,1	89	RSS101	19
	54	121	C102C	15
	63,5	133	RH102	20
	104,8	172	C104C	15
	155,6	248	C106C	15
	155,6	292	C106CBT	16
	158,8	297	RD106	25
	203,2	287	RH108	20
	206,4	299	C108C	15
	254	391	RD1010	25
	257,2	349	C1010C	15
	257,2	394	C1010CBT	16
	308	400	C1012C	15
	358,8	451	C1014C	15
12 ton	7,9	56	RH120	20
	41,3	122	RH121	20
	41,3	122	RH121T	20
	76,2	184	RH123	20
15 ton	25,4	124	C151C	15
	54	149	C152C	15
	104,8	200	C154C	15
	155,6	271	C156C	15
	206,4	322	C158C	15
	257,2	373	C1510C	15
	308	424	C1512C	15
	358,8	475	C1514C	15
	406,4	522	C1516C	15
17,5 ton	50,8	175	RT172	22
20 ton	11,1	50,8	RLS200	18
	44,5	95	RSS202	19
	50,8	156	RH202	20
	54	162	RA202	17
	76,2	154	RH203	20
	104,8	213	RA204	17
	152,4	308	RH206	20
	155,6	264	RA206	17
25 ton	25,4	140	C251C	15
	50,8	165	C252C	15
	101,6	216	C254C	15
	158,8	273	C256C	15
	158,8	314	C256CBT	16
	158,8	340	RD256	25
	209,6	324	C258C	15
25 ton	260,4	375	C2510C	15
	311,2	425	C2512C	15
	362	476	C2514C	15
	362	543	C2514CBT	16
	362	518	RD2514	25
30 ton	12,7	59	RLS300	18
	54	187	RA302	17
	61,9	117	RSS302	19
	63,5	159	RH302	20
	63,5	214	RT302	22
	76,2	179	RH303	21
	104,8	238	RA304	17
	149,2	283	RHA306	20
	152,4	248	RH306	20
	152,4	281	RH306D	21
	155,6	289	RA306	17
	257,2	438	RH3010	21
50 ton	15,9	67	RLS500S	18
	60,3	127	RSS502	19
	76,2	181	RH503	20
	76,2	268	RT503	22
55 ton	50,8	125,4	R552C	26
	50,8	162	R552L	29
	50,8	175	C552C	15
	54	171	RA552	17
	104,8	222	RA554	17
	108	232	C554C	15
	152,4	264	R556C	26
	152,4	321	R556L	28
	155,6	273	RA556	17
	155,6	318	RA556L	28
	158,8	283	C556C	15
	158,8	329	RD556	25
	254	328,6	R5510C	26
	254	365	R5510L	29
	254	384	RA5510	26
	260,4	384	C5510C	15
	333,4	504	RD5513	25
	336,6	460	C5513C	15
	463,6	657	RD5518	25
60 ton	76,2	235	RH603	20
	101,6	241	RHA604D	21
	127	241	RH605	21
	152,4	318	RH606	20
	257,2	459	RH6010	21
75 ton	15,9	79	RLS750S	18
	155,6	314	C756C	15
	333,4	492	C7513C	15
80 ton	333,4	518	RD8013	25
100 ton	15,9	86	RLS1000S	18
	38,1	144	RSS1002D	19
	38,1	165	RH1001	21
	50,8	139,7	R1002C	26
	50,8	169	R1002D	27
	50,8	184	R1002L	29
	50,8	219	C1002C	15
	54	197	RA1002	19

*For these and special cylinder requirements, contact your local sales office.

(mm)	Stroke (mm)	Re-tracted Height No.	Order No.	Page
100 ton	57,2	139,7	RSS1002	19
	76,2	254	RH1003	20
	123,8	384	RT1004	22
	152,4	241,3	R1006C	26
	152,4	270	R1006D	27
	152,4	286	R1006L	29
	152,4	314	RH1006	21
	158,8	298	RA1006	17
	158,8	340	RA1006L	28
	168,3	337	C1006C	15
	168,3	350	RD1006	25
	254	342,9	R10010C	*
	254	372	R10010D	27
	254	387	R10010L	29
	260,4	503	RH10010	21
	260,4	429	C10010C	15
	333,4	515	RD10013	25
	511,2	718	RD10020	25
150 ton	14,3	102	RLS1500S	18
	50,8	162	R1502C	26
	50,8	189	R1502D	27
	50,8	206	R1502L	29
	127	308	RH1505	21
	152,4	264	R1506C	26
	152,4	291	R1506D	27
	152,4	308	R1506L	29
	168,3	378	RD1506	25
	203,2	349	RH1508	21
	254	365	R15010C	*
	254	392	R15010D	*
	254	410	R15010L	*
	333,4	543	RD15013	25
	460,4	674	RD15018	25
200 ton	50,8	191	R2002C	26
	50,8	207	R2002D	27
	50,8	241	R2002L	29
	152,4	292	R2006C	26
	152,4	308	R2006D	27
	152,4	343	R2006L	29
	168,3	406	RD2006	25
	203,2	408	RH2008	21
	254	394	R20010C	*
	254	410	R20010D	27
	254	445	R20010L	*
	333,4	572	RD20013	25
	460,4	723,9	RD20018	25
250 ton	76,2	290	RSS2503	19
280 ton	50,8	191	R2802C	*
	50,8	234	R2802D	*
	50,8	248	R2802L	29
	152,4	292	R2806C	*
	152,4	335	R2806D	27
	152,4	349	R2806L	29
	254	394	R28010C	*
	254	437	R28010D	27
	254	451	R28010L	29
300 ton	152,4	439	RD3006	25
	330,2	617	RD30013	25
355 ton	50,8	232	R3552C	26
	50,8	292	R3552L	27
	50,8	290	R3552D	26
	152,4	333	R3556C	27
	152,4	394	R3556L	29
	152,4	448	R3556D	27
	254	435	R35510C	26
	254	495	R35510L	*
	254	550	R35510D	26
400 ton	152,4	473	RD4006	25
	330,2	651	RD40013	25
430 ton	50,8	264	R4302C	*
	50,8	333	R4302L	29
	50,8	313	R4302D	27
	152,4	365	R4306C	26
	152,4	435	R4306L	29
	152,4	413	R4306D	27
	254	467	R43010C	27
	254	537	R43010L	29
	254	516	R43010D	27
500 ton	152,4	499,3	RD5006	25
	330,2	677	RD50013	25
565 ton	50,8	292	R5652C	26
	50,8	371	R5652L	29
	50,8	345	R5652D	27
	152,4	394	R5656C	26
	152,4	473	R5656L	29
	152,4	447	R5656D	27
	254	495	R56510C	26
	254	575	R56510L	26
	254	548	R56510D	27
NEW 740-1220 Ton	50, 150, 250		RC....C	29
	50, 150, 250		RC....D	31
	50, 150, 250		RC....L	35

Selection

Choosing The Right Cylinder

Step 1 Select the hydraulic cylinder that best suits the application. See page 7, 12-13.

Step 2 Select the hydraulic pump, with valve option, that best matches the cylinder and application. See pages 6, 44-50.

Step 3 Select the hydraulic accessories you need. See pages 36-41.

CONSIDERATIONS:

1. What push or pull tonnage is required per cylinder in your application? (Rule of thumb; Always choose a cylinder with a tonnage rating of 20% or more than what is required to lift the load.)
2. What is the push or pull stroke length required?
3. Does the cylinder need to push, pull or both? (Single-acting cylinders extend the piston under hydraulic pressure; double-acting cylinders extend and retract the piston under pressure.)
4. Does the application require multiple cylinders?
5. Is the application stationary, or must the components be light in weight for easy portability?
6. Do you need to extend a rod or cable through the center of the cylinder for the application, as in a tensioning operation?
7. Does the application require that the cylinder fit within limited-clearance work areas?
8. Does the application require that the cylinder be "dead-ended" at the end of it's work stroke?
9. Will the cylinder need to withstand off-center loads? Cylinders with swivel caps are available.
10. Does the application require that the lifted load be supported for extended periods of time? Locking collars are ideal for such jobs, as are cribbing blocks.
11. Is corrosion resistance required? Our unique "Power Tech" surface treatment is standard on many Power Team cylinders, and optional on many of our cylinders which feature steel construction.
12. Will the application involve high cycles (over 2,500 in the cylinders lifetime)? Our "RD", "RH", "RP" and "C" series cylinders are ideal choices. Please refer to pages 12-13 for the capabilities of each cylinder.

ONLY POWER TEAM PROVIDES THE "POWER TECH" SURFACE TREATMENT:

- High corrosion and wear resistance, anti-galling properties.
- Significantly increases the life expectancy of a cylinder.
- Retains lubricants, prevents bronze and other materials from sticking to surface.
- Increases fatigue strength and impact strength.
- Increases surface yield and tensile strength.
- Provides improved abrasion and scratch resistance.
- Causes no appreciable dimensional change.
- 56 Rc minimum surface hardness.
- Passes ASTM B117-85 100 hour salt spray corrosion resistance tests.

The **"Power Tech"** surface treatment is standard on the gland nut, cylinder body and piston/piston rod of the following cylinders: RLS50, RLS100, RLS200, RLS300, RLS500S, RLS750S, RLS1000S, RLS1500S, and RSS1002. NOTE: Bronze plating may be used in place of the "Power Tech" surface finish for the piston/piston rod of any of the above cylinders.The **"Power Tech"** surface treatment is standard on the standpipe of all "RH" series single and double-acting cylinders. The **"Power Tech"** surface treatment is standard on the piston/piston rod of the RT172, RT302 and RT503 cylinders.

WHAT TYPE OF CYLINDER DO YOU NEED?

1. To determine a cylinder's force capacity:

FORCE kg | Cylinder Effective Area (cm^2) | **X** | Bar from Pump

2. To determine oil capacity of a cylinder:

OIL CAPACITY (cm^3) | Cylinder Effective Area (cm^2) | **X** | Cylinder Stroke (cm)

3. To determine reservoir capacity needed for a multiple cylinder system:

USABLE OIL | Oil Cap. of Cyl. (cm^3) | **X** | Number of Cyl. in System

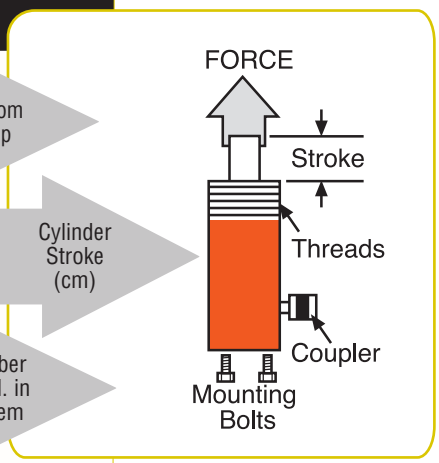

Note: For double-acting cylinders, oil in rod end of cylinder must be subtracted to determine capacity.

POWER TEAM

Choosing the Right Tool

Tool	The Questions you need to ask.	
CHOOSING THE RIGHT TORQUE WRENCH	1. Are there work area space/access issues or tool size limitations? 2. How far from the stationary object will the reaction arm be placed? (Reaction arm must rest against stationary object for support) 3. Single acting or double acting tool? 4. What size bolts need to be loosened or tightened? 5. What is torque requirement for the application? (use reference on page 241 to estimate torque required and recommended models) 6. Based on torque value, how much pressure required? (pressure setting for pump) 7. What type of pump to power the tool – electric, gas, hand?	
CHOOSING THE RIGHT CABLE TOOL	1. Cutting wire/bar/cable? 2. Crimping wire/cable? 3. What is the maximum wire/bar/cable size anticipated? (tool force selection) 4. If crimping, what type crimp required? (U, W, O, shell-type dies) 5. Hand tool or remote head operated with electric/gas pump?	
CHOOSING THE RIGHT PULLER	1. Mechanical puller or hydraulic puller? (page 204-212 and page 218-228). 2. Does the job require a two jaw puller or a three jaw puller? 3. How much force is needed to complete the pull? 4. How much reach is needed? 5. How much spread is needed?	

Hydraulic
CIRCUITS

Pumps, Cylinders, Controls

These are just a few basic systems possible with Power Team hydraulic components. Countless applications are possible: In presses, for lifting or jacking applications or in production or maintenance setups. The pump shown is a typical electric/hydraulic unit. Electric, air or gas driven pumps are available.

1 Single-acting cylinder or cylinders in the circuit, controlled by a pump mounted valve.

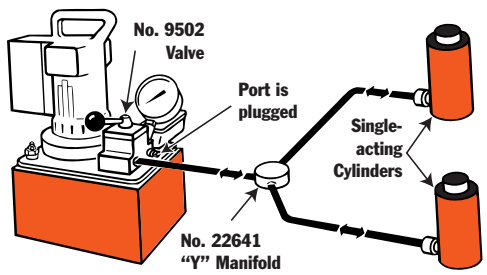

2 Double-acting cylinder or cylinders in the circuit, controlled by a pump mounted valve.

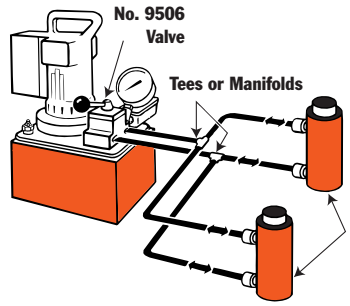

3 Single-acting cylinder controlled by a remote mounted valve.

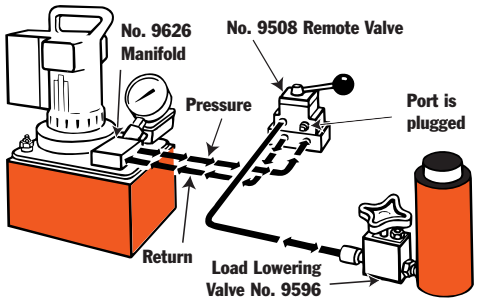

4 Double-acting cylinders controlled by a remote mounted valve.

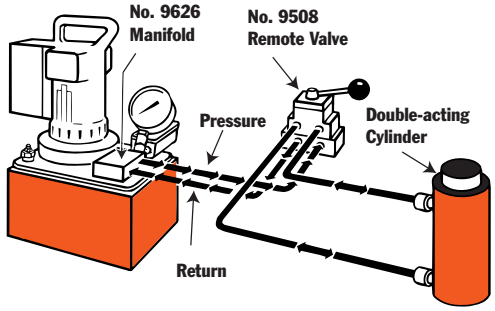

5 Single-acting cylinders with a sequence valve which controls the primary and secondary cylinder circuits.

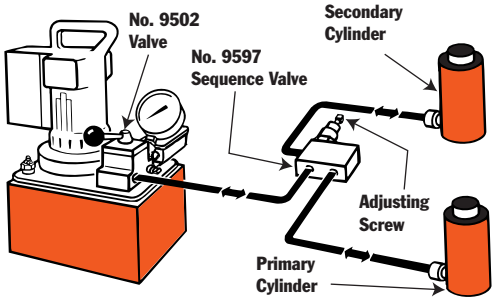

6 Double-acting cylinder with a sequence valve which controls the primary and secondary cylinder circuits.

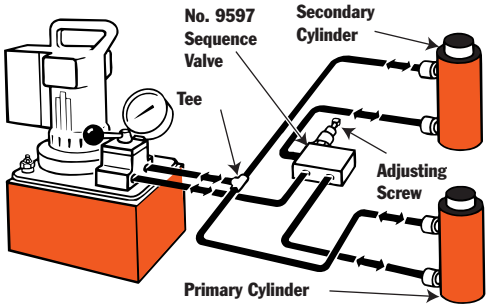

POWER TEAM

Basic single-acting system with a hand pump, gauge, hose and single-acting cylinder.

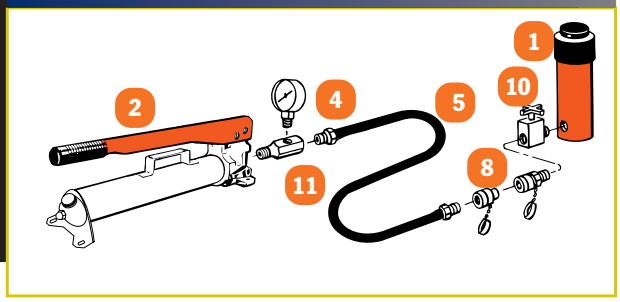

1. Cylinder – applies hydraulic force.
2. Pump – a device for converting mechanical energy to fluid energy.
3. Directional valve – controls the direction of hydraulic fluid in the system.
4. Gauge – measures bar pressure and/or force.
5. Hose – transports hydraulic fluid.
6. Manifold – allows distribution of hydraulic fluid from one source to several cylinders. (No. 9617)
7. Swivel Connector – allows proper alignment of valves and/or gauges. Used when units being connected cannot be rotated. (No. 10469)
8. Quick Coupling – "hose half" and "cylinder half" couplings are used for quick connection and fluid flow check when separated. (No. 9797 and 9798)
9. Shut-Off Valve – regulates the flow of hydraulic fluid to or from cylinders. (No. 9642 or 9644)
10. Load-Lowering Valve – allows metered lowering of cylinder and provides safety when prolonged load holding is required. (No. 9596)
11. Tee Gauge Adapter – allows for installation of pressure/tonnage gauge anywhere in the hydraulic system. (No. 9670)
12. Pipe Plug – for blocking unused ports within the system. (No. 10909)

Basic single-acting system with a hand pump, gauge, hose, multiple shut-off valves, load-lowering valves and multiple cylinders.

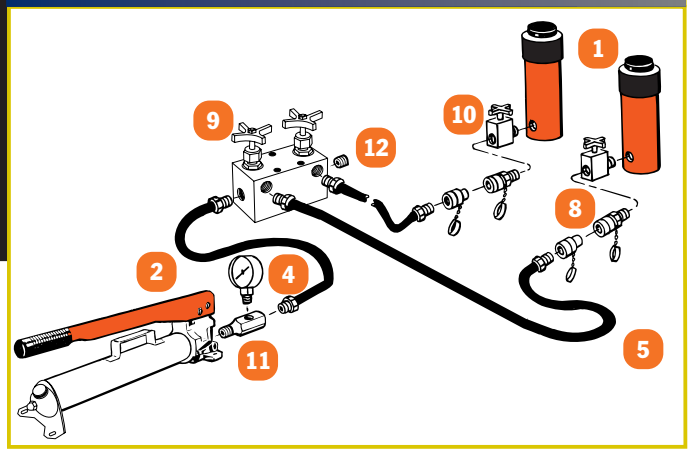

Basic double-acting system with an electric/hydraulic pump,shut-off valves, load-lowering valves and multiple double-acting cylinders.

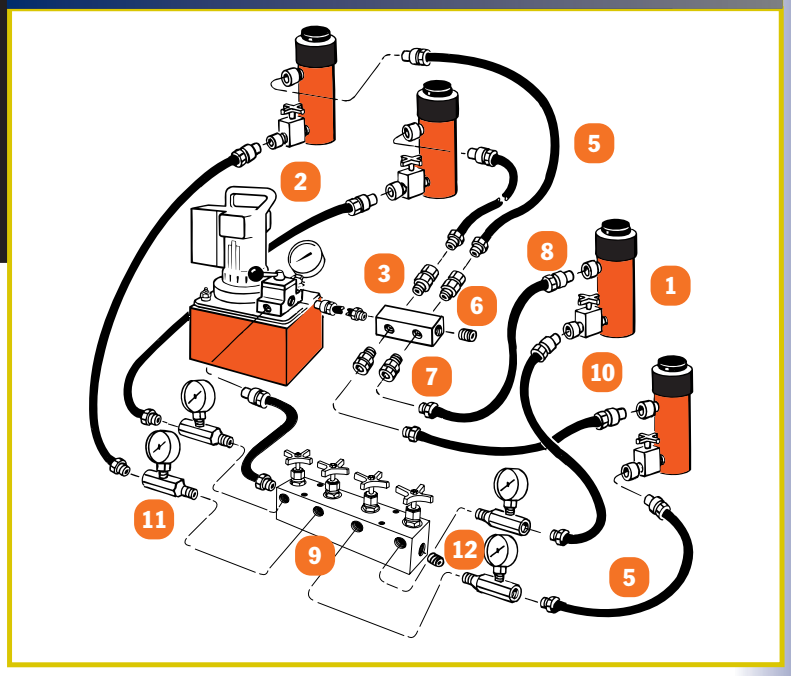

CYLINDERS

SUPERIOR FEATURES OF POWER TEAM HYDRAULIC CYLINDERS:

We build our own cylinders in our ISO 9001 registered manufacturing facility. All Power Team cylinders are date-coded. Maximum pressure rating and capacity are stamped on the cylinder. All cylinders comply to the demanding ASME B30.1 standard and are proof tested to 125% of capacity before leaving our factory. Cylinder bores are roller burnished to harden the surface and make it smoother, increasing seal life by 30%. Base mounting holes withstand full capacity of the cylinder. Typical cylinder burst pressures range from 700 to 2400 bar. Cylinders with gland nuts may be "dead-ended" at 700 bar. Cylinders are assembled and tested by certified assemblers. Eddy current and mag particle inspection detects flaws in the steel. Cylinder bodies are solid steel, not welded like some competitive cylinders. Material is removed from surface, to assure that any flaws are removed.

FROM 2 TO 1220 TONS!

Series	Description	Page	Action	TONNAGE 2	5	10	12	15	17.5	20	25	30	50
C	General Purpose	14	Single/Spring		X	X		X			X		
CBT	Threaded End Cylinders	16	Single/Spring		X	X					X		
RA	Aluminum Cylinders	17	Single/Spring							X		X	
RD	Industrial Cylinders	18	Double Acting		4	9	16				X		
RLS	Low Profile Cylinders	20	Single/Spring		X	X				X		X	X
RSS	Shorty Cylinders	21	Single/Spring/Double Act			X				X		X	X
RH	Center Hole Cylinders	22	Single/Spring/Double Act			X	X			X		X	X
RT	Center Hole Power Twin Cylinders	24	Single/Spring/Double Act						X			X	X
RP	Pull Cylinders	25	Single/Spring	X	X								
RD	Double Acting Cylinders	26	Double Acting			X					X		
R	High Tonnage Cylinder	28, 30	Single Acting/Load Return/ Double Acting										
RL	Locking Collar Cylinders	32, 34-35	Single Acting/Load Return										
RC	Pancake Cylinders	33	Single Acting/Load Return										

	TONNAGE															
	55	60	75	80	100	150	200	250	280	300	355	400	430	500	565	740 TO 1220
C	X		X		X											
CBT																
RA	X				X											
RLS			X		X	X										
RSS					X			X								
RH		X			X	X	X									
RT					X											
RP																
RD	X			X	X	X	X			X		X		X		
R	X				X	X	X		X		X		X		X	X
RL	X†				X†	X	X		X		X		X		X	X
RC	X				X	X		240			X				620	

† LOCKING COLLAR AVAILABLE IN ALUMINUM.

General Purpose
CYLINDERS C SERIES

5-100 TONS
General Purpose, Single Acting, Spring-Return

Rugged, high quality cylinder used for lifting and pressing

CYLINDERS

- Aluminum bronze bearing reduces wear caused by off-center loads.
- Maximum sized springs speed piston return and increase spring life.
- Solid steel cylinder body for durability.
- Chrome plated piston rod resists wear and corrosion.
- Wide range of accessories available to thread onto piston rod, collar, or onto cylinder base.
- Base mounting holes standard on 5 through 55 ton cylinders; optional on 75 and 100 ton cylinders.
- A 3/8" NPTF female half coupler is standard.

C756C

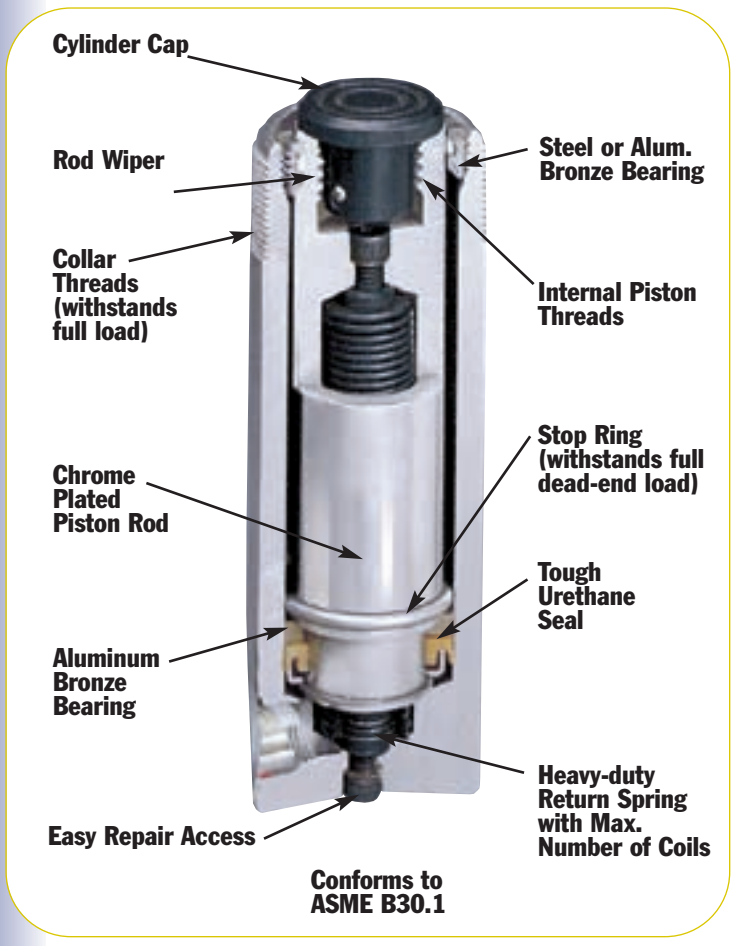

C106C

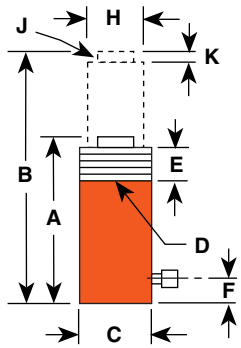

Base mounting holes page 237.

Cyl Cap Tons	Stroke (mm)	Order No.	Oil Cap. (cm³)	A Re-tracted Height (mm)	B Ex-tended Height (mm)	C Outside Dia. (mm)	D Collar Thread (in.)	E Piston Collar Thread Length (mm)	F Base to Port (mm)	H Piston Rod Dia. (mm)	J Piston Rod Int. Thread and Depth (mm)	K Rod Protru-sion (mm)	Bore Dia. (mm)	Cylinder Effective Area (cm²)	Metric Tons at 700 (bar)	Weight (kg)
5	25,4	**C51C**	18	110,3	138,1	38,1	1 1/2-16	28,6	19,1	25,4	3/4-16 x 15,9	6,4	28,6	6,4	4,5	1,0
	82,6	**C53C**	52	165,1	247,7	38,1	1 1/2-16	28,6	19,1	25,4	3/4-16 x 15,9	6,4	28,6	6,4	4,5	1,5
	133,4	**C55C**	85	215,9	349,3	38,1	1 1/2-16	28,6	19,1	25,4	3/4-16 x 15,9	6,4	28,6	6,4	4,5	1,8
	184,2	**C57C**	118	273,1	457,2	38,1	1 1/2-16	28,6	19,1	25,4	3/4-16 x 15,9	6,4	28,6	6,4	4,5	2,3
	235,0	**C59C**	151	323,9	558,8	38,1	1 1/2-16	28,6	19,1	25,4	3/4-16 x 15,9	6,4	28,6	6,4	4,5	2,6
10	25,4	**C101C**	36	92,1	117,5	57,2	2 1/4-14	28,6	19,1	38,1	1-8 x 19,1	6,4	42,8	14,4	10,2	1,8
	54,0	**C102C**	79	120,7	174,6	57,2	2 1/4-14	28,6	19,1	38,1	1-8 x 19,1	6,4	42,8	14,4	10,2	2,3
	104,8	**C104C**	151	171,5	276,2	57,2	2 1/4-14	28,6	19,1	38,1	1-8 x 19,1	6,4	42,8	14,4	10,2	3,0
	155,6	**C106C**	225	247,7	403,2	57,2	2 1/4-14	28,6	19,1	38,1	1-8 x 19,1	6,4	42,8	14,4	10,2	4,3
	206,4	**C108C**	362	298,5	504,8	57,2	2 1/4-14	28,6	19,1	38,1	1-8 x 19,1	6,4	42,8	14,4	10,2	5,0
	257,2	**C1010C**	370	349,3	606,4	57,2	2 1/4-14	28,6	19,1	38,1	1-8 x 19,1	6,4	42,8	14,4	10,2	5,9
	308,0	**C1012C**	444	400,1	708 ,0	57,2	2 1/4-14	28,6	19,1	38,1	1-8 x 19,1	6,4	42,8	14,4	10,2	6,6
	358,8	**C1014C**	518	450,9	809,6	57,2	2 1/4-14	28,6	19,1	38,1	1-8 x 19,1	6,4	42,8	14,4	10,2	7,3
	406,4	**C1016C**	592	520,7	927,1	57,2	2 1/4-14	28,6	19,1	38,1	1-8 x 19,1	6,4	42,8	14,4	10,2	8,4
15	25,4	**C151C**	51	123,8	149,2	69,9	2 3/4-16	28,6	19,1	44,5	1-8 x 19,1	6,4	50,8	20,3	14,2	3,4
	54,0	**C152C**	110	149,2	203,2	69,9	2 3/4-16	28,6	19,1	44,5	1-8 x 19,1	6,4	50,8	20,3	14,2	4,0
	104,8	**C154C**	211	200 ,0	304,8	69,9	2 3/4-16	28,6	19,1	44,5	1-8 x 19,1	6,4	50,8	20,3	14,2	5,2
	155,6	**C156C**	315	271,4	427,0	69,9	2 3/4-16	28,6	19,1	44,5	1-8 x 19,1	6,4	50,8	20,3	14,2	6,9
	206,4	**C158C**	418	322,2	528,6	69,9	2 3/4-16	28,6	19,1	44,5	1-8 x 19,1	6,4	50,8	20,3	14,2	8,1
	257,2	**C1510C**	521	373 ,0	630,2	69,9	2 3/4-16	28,6	19,1	44,5	1-8 x 19,1	6,4	50,8	20,3	14,2	9,4
	308,0	**C1512C**	625	423,8	731,8	69,9	2 3/4-16	28,6	19,1	44,5	1-8 x 19,1	6,4	50,8	20,3	14,2	10,5
	358,8	**C1514C**	728	474,6	833,4	69,9	2 3/4-16	28,6	19,1	44,5	1-8 x 19,1	6,4	50,8	20,3	14,2	11,8
	406,4	**C1516C**	824	522,3	928,7	69,9	2 3/4-16	28,6	19,1	44,5	1-8 x 19,1	6,4	50,8	20,3	14,2	12,8
25	25,4	**C251C**	84	139,7	165,1	85,7	3 5/16-12	49,2	25,4	57,2	1 1/2-16 x 25,4	9,5	65,1	33,2	23,4	5,4
	50,8	**C252C**	169	165,1	215,9	85,7	3 5/16-12	49,2	25,4	57,2	1 1/2-16 x 25,4	9,5	65,1	33,2	23,4	6,3
	101,6	**C254C**	338	215,9	317,5	85,7	3 5/16-12	49,2	25,4	57,2	1 1/2-16 x 25,4	9,5	65,1	33,2	23,4	8,0
	158,8	**C256C**	528	273,1	431,8	85,7	3 5/16-12	49,2	25,4	57,2	1 1/2-16 x 25,4	9,5	65,1	33,2	23,4	9,8
	209,6	**C258C**	697	323,9	533,4	85,7	3 5/16-12	49,2	25,4	57,2	1 1/2-16 x 25,4	9,5	65,1	33,2	23,4	11,6
	260,4	**C2510C**	865	374,4	635,0	85,7	3 5/16-12	49,2	25,4	57,2	1 1/2-16 x 25,4	9,5	65,1	33,2	23,4	13,3
	311,2	**C2512C**	1.036	425,5	736,0	85,7	3 5/16-12	49,2	25,4	57,2	1 1/2-16 x 25,4	9,5	65,1	33,2	23,4	15,0
	362,0	**C2514C**	1.205	476,3	838,2	85,7	3 5/16-12	49,2	25,4	57,2	1 1/2-16 x 25,4	9,5	65,1	33,2	23,4	16,7
55	50,8	**C552C**	362	174,6	225,4	127,0	5-12	55,6	34,9	79,4	-	3,2	95,3	71,2	50,1	14,7
	108,0	**C554C**	769	231,8	339,7	127,0	5-12	55,6	34,9	79,4	-	3,2	95,3	71,2	50,1	18,7
	158,8	**C556C**	1.131	282,6	441,3	127,0	5-12	55,6	34,9	79,4	-	3,2	95,3	71,2	50,1	23,1
	260,4	**C5510C**	1.853	384,2	644,5	127,0	5-12	55,6	34,9	79,4	-	3,2	95,3	71,2	50,1	30,4
	336,6	**C5513C**	2.398	460,4	796,9	127,0	5-12	55,6	34,9	79,4	-	3,2	95,3	71,2	50,1	35,3
75	155,6	**C756C**	1.596	314,3	469,9	146,1	5 3/4-12	44,5	31,8	95,3	-	3,2	114,3	102,6	72,1	33,3
	333,4	**C7513C**	3.421	492,1	825,5	146,1	5 3/4-12	44,5	31,8	95,3	-	3,2	114,3	102,6	72,1	49,6
100	50,8	**C1002C**	675	219,1	269,9	158,8	6 1/4-12	57,2	41,3	104,8	-	3,2	130,2	133,0	93,6	28,5
	168,3	**C1006C**	2.245	336,6	504,8	158,8	6 1/4-12	57,2	41,3	104,8	-	3,2	130,2	133,0	93,6	41,2
	260,4	**C10010C**	3.467	428,6	689,0	158,8	6 1/4-12	57,2	41,3	104,8	-	3,2	130,2	133,0	93,6	51,2

Threaded End
CYLINDERS CBT SERIES

5-25 TONS
Single Acting,
Spring-Return

Threaded piston rod end and base threads accommodate accessories and adapters.

CYLINDERS

- Threaded cylinder collars, piston rod ends, and internal base threads simplify mounting.
- A 9796 3/8" NPTF female half coupler is standard with each cylinder; oil port threads are 3/8" NPTF.

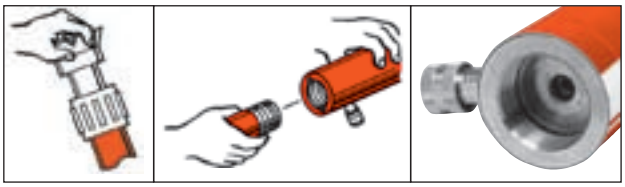

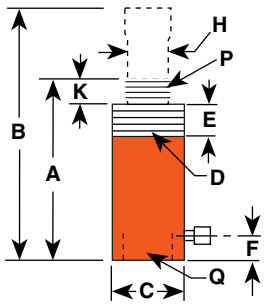

Cyl. Cap. (tons)	Stroke (mm)	Order No.	Oil Cap. (cm³)	A Re-tracted Height (mm)	B Ex-tended Height (mm)	C Outside Dia. (mm)	D Collar Thread (in.)	E Collar Thread Length (mm)	F Base to Port (mm)	H Piston Rod Dia. (in.)	K Piston Rod Protrusion (mm)	P Piston Rod Thread (NPT)	Q Internal Base Thread (NPSM) (in.)	Bore Dia. (mm)	Cyl. Eff. Area (cm²)	Metric Tons at 700 bar	Weight (kg)
5	133,4	C55CBT	85	266,7	400,1	38,1	$1^1/_2$–16	28,6	47,6	25,4	28,6	$^3/_4$–14	$^3/_4$–14	28,6	6,4	4,5	2,0
10	155,6	C106CBT	228	292,1	447,7	57,2	$2\,^1/_4$–14	28,6	42,9	38,1	27,0	$1^1/_4$–$11^1/_2$	$1^1/_4$–$11^1/_2$	27,0	14,4	10,2	4,7
	257,2	C1010CBT	375	393,7	650,9	57,2	$2\,^1/_4$–14	28,6	42,9	38,1	27,0	$1^1/_4$–$11^1/_2$	$1^1/_4$–$11^1/_2$	27,0	14,4	10,2	6,3
25	158,8	C256CBT	528	339,7	498,5	85,7	$3^5/_{16}$–12	49,2	47,6	57,2	47,6	2–$11^1/_2$	2–$11^1/_2$	47,6	33,3	23,4	11,1
	362,0	C2514CBT	1205	542,9	904,9	85,7	$3^5/_{16}$–12	49,2	47,6	57,2	47,6	2–$11^1/_2$	2–$11^1/_2$	47, 6	33,3	23,4	18,2

CYLINDER/PUMP MATCHING Page 6
ACCESSORY/REPAIR Page 36
PUMP/CYLINDER SETS Page 61
HYDRAULIC ACCESSORIES Page 120
VALVES Page 129
TECH DATA Page 237

ALUMINUM
CYLINDERS RA-SERIES

20-200 TONS
Single Acting,
Spring-Return

Half the weight of equal capacity steel cylinders.

- Half the weight of steel cylinders.
- Aluminum body resists sparking in explosive environments.
- Hard coated aluminum piston rod and cylinder bore resist wear and corrosion.
- Grooved piston top helps keep the load from sliding on top of piston.
- Designed for jacking and other non- production operations.

RA552

ASME B30.1
700 BAR

RA1006

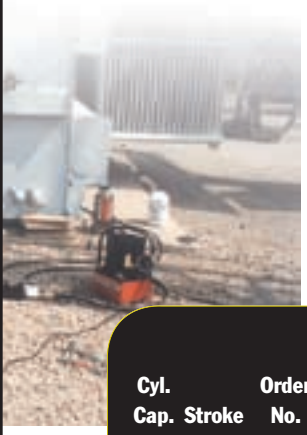

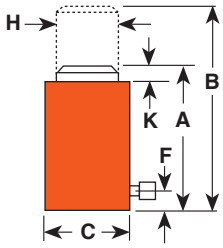

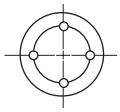

Base Mtg. Holes (4) at 45° from coupler (RA556, RA5510) 3/8"-16 x 114,3mm Dia. B.C. Depth = 12,7 mm

Cyl. Cap. (tons)	Stroke (mm)	Order No.	Oil Cap. (cm³)	A Retracted Ht. (mm)	B Extended Ht. (mm)	C Outside Dia. (mm)	F Base to Port (mm)	H Piston Rod Dia. (mm)	K Piston Rod Protrusion (mm)	Bore Dia. (mm)	Cylinder Effective Area (cm²)	Metric Tons at 700 bar	Weight. (kg)
20	54,0	**RA202**	154	161,9	215,9	95,3	31,8	50,8	7,9	60,3	28,6	20,1	3,5
	104,8	**RA204**	300	212,7	317,5	95,3	31,8	50,8	7,9	60,3	28,6	20,1	4.2
	155,6	**RA206**	445	263,5	419,1	95,3	31,8	50,8	7,9	60,3	28,6	20,1	5.1
30	54,0	**RA302**	226	187,3	241,3	108,0	31,8	63,5	9,5	73,0	41,9	29,4	5,0
	104,8	**RA304**	439	238,1	342,9	108,0	31,8	63,5	9,5	73,0	41,9	29,4	5,9
	155,6	**RA306**	652	288,9	444,5	108,0	31,8	63,5	9,5	73,0	41,9	29,4	6,8
55	54,0	**RA552**	386	171,5	225,4	133,4	34,9	79,4	6,4	95,3	71,2	50,1	7,3
	104,8	**RA554**	746	222,3	327,0	133,4	34,9	79,4	6,4	95,3	71,2	50,1	8,9
	155,6	**RA556***	1.109	273,1	428,6	133,4	34,9	79,4	6,4	95,3	71,2	50,1	10,9
	254,0	**RA5510***	1.811	384,2	638,2	133,4	34,9	79,4	6,4	95,3	71,2	50,1	14,4
100	54,0	**RA1002**	718	196,9	250,8	187,3	30,2	104,8	3,2	130,2	133,0	93,5	15,1
	158,8	**RA1006***	2.116	298,5	457,2	187,3	30,2	104,8	3,2	130,2	133,0	93,5	22,6
NEW 150	152,4	**RA1506**		Contact factory for details and availability									
NEW 200	152,4	**RA2006**		Contact factory for details and availability									

* Equipped with carrying handles.

CYLINDER/PUMP MATCHING Page 6
ACCESSORY/REPAIR Page 36
PUMP/CYLINDER SETS Page 61
HYDRAULIC ACCESSORIES Page 120
VALVES Page 129
TECH DATA Page 237

Industrial
CYLINDERS, RD SERIES

4-25 Tons
Double Acting

Double-acting, hydraulic return cylinder. Push and pull forces in tight places.

CYLINDERS

Need an industrial-grade cylinder that can push or pull your workload? Then look to the new Power Team RD Serie double-acting, hydraulic return cylinder. Providing push and pull forces in tight spaces, this line of cylinders is perfect for many applications where a high powered return stroke is needed. Ideal for production environments.

Double-Acting Industrial Cylinders

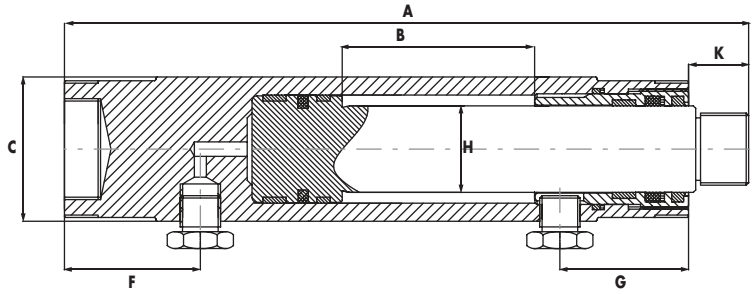

In mm					A	B	C	F	G	H	K			
Cyl. Cap. (tons)	Stroke	Model No.	Oil Capacity Push	Pull	Re-tracted Height	Ex-tended Height	Outside Dia.	Base to Port	Cyl. Top to Port	Piston Rod Dia.	Piston Rod Pro-trusion	Cyl. Effective Area (cm³) Push	Tons @ 350 bar Push	Product Wt. (kg)
4	25,4	RD41U												
4	76,2	RD43U												
4	152,4	RD46U												
9	25,4	RD91U												
9	76,2	RD93U												
9	152,4	RD96U												
9	254	RD910U												
16	152,4	RD166U												
16	254	RD1610U												
25	152,4	RD256U												
25	254	RD2510U												

Contact Factory For Details and Availability

POWER TEAM

- Premium design - for use where high cycling required.
- Wide range of mounting configurations.

Foot Mounting With Retainer Nut
Mounts onto
collar thread

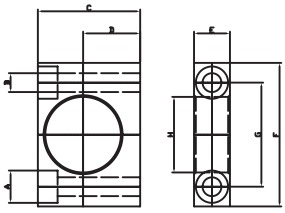

Flange Mounting With Retainer Nut
Mounts onto
collar thread

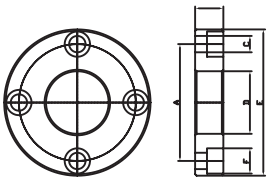

Retainer Nut
Mounts onto
base or collar threads.

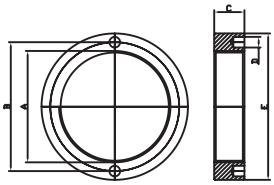

Clevis Eye
Threads onto
plunger or base.

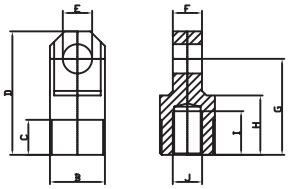

Model No.	In mm A	B	C	D	E	F	G	H	I	J	Product Wt. (kg)
Foot Mounting With Retainer Nut											
Contact Factory For Details and Availability											
Flange Mounting With Retainer Nut											
Contact Factory For Details and Availability											
Retainer Nut											
Contact Factory For Details and Availability											
Body Clevis											
Contact Factory For Details and Availability											

Low profile
CYLINDERS RLS SERIES

5-150 Ton
Single-Acting,
Spring-Return

Ideal for confined areas from 41 to 101,6 mm clearance.

CYLINDERS

- Cylinder body, piston and gland nut "Power Tech" treated for corrosion and abrasion resistance (see page 8).
- Standard domed piston rod (5-30 ton) or swivel cap (50-150 ton) minimize effects of off-center loading.
- Unique heavy duty spring provides fast piston return.
- A 9796 3/8" NPTF female half coupler is standard with each cylinder (the RLS50 has a 3/8" coupler which is not angled). Oil ports are 3/8" NPTF (except the RLS50).
- Couplers on all cylinders, except RLS50, are angled upward for extra clearance.

RLS100

ASME B30.1
700 BAR

RLS1000S

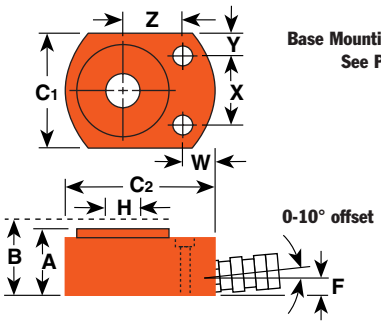

Base Mounting Holes
See Page 237

Cyl. Cap. (tons)	Stroke (mm)	Order No.	Oil Cap. (cm³)	A Re-tracted Height (mm)	B Ex-tended Height (mm)	C1 & C2 Outside Dia. (mm)	F Base to Port (mm)	H Piston Rod Prod. Dia. (mm)	W	X	Y	Z	Bore Dia. (mm)	Cyl. Eff. Area (cm²)	Metric Tons at 700 bar	Weight (kg)
									Mounting Hole Location (mm)							
5	14,3	RLS50	10	41,3	55,6	41,3x65,1	19,1	15,9	19,1	28,6	6,4	25,4	28,6	6,4	4,5	1,0
10	11,1	RLS100	17	44,5	55,6	55,6x82,6	15,9	19,1	17,5	36,5	9,5	33,3	42,9	14,4	10,1	1,5
20	11,1	RLS200	33	50,8	61,9	76,2x101,6	16,7	28,6	18,3	49,2	13,5	39,7	60,3	28,6	20,1	2,5
30	12,7	RLS300	53	58,7	71,4	95,3x114,3	18,3	34,9	20,6	52,4	21,4	44,5	73,0	41,9	29,5	3,9
50	15,9	RLS500S	99	66,7	82,6	114,3x139,7	21,4	44,5	23,8	66,7	23,8	54,0	88,9	62,1	43,6	6,3
75	15,9	RLS750S	163	79,4	95,3	140,5x165,1	25,4	54,0	23,8	76,2	32,1	65,9	114,3	102,6	72,2	10,6
100	15,9	RLS1000S	202	85,7	101,6	152,4x177,8	25,4	63,5	20,6	76,2	38,1	71,4	127,0	126,6	89,1	13,6
150	14,3	RLS1500S	282	101,6	115,9	190,5x215,9	33,3	76,2	33,3	117,5	36,5	79,4	158,8	197,9	139,2	23,6

CYLINDER/PUMP MATCHING Page 6
ACCESSORY/REPAIR Page 36
PUMP/CYLINDER SETS Page 61
HYDRAULIC ACCESSORIES Page 120
VALVES Page 129
TECH DATA Page 237

Shorty
CYLINDERS RSS SERIES

10-250 Ton
Single-Acting, Spring-Return & Double-Acting

Ideal for confined areas from 89 to 290,5 mm clearance.

CYLINDERS

- Power Tech plated piston rods and gland nuts resist scoring and corrosion.
- Heavy duty return spring (except for double-acting models) provides fast piston return & low collapsed height.
- Coupler on 10 thru 50 ton models is angled upward 5° for added clearance.
- Grooved piston top keeps load from sliding.
- Cylinders can be "dead-ended" at full capacity.
- Removable carrying handles on 100 ton and 250 ton models.

RSS2503

RSS302

ASME B30.1
700 BAR

Cribbing blocks are shown in a 30 ton RSS302 "Shorty" cylinder. For more information see pg 40.

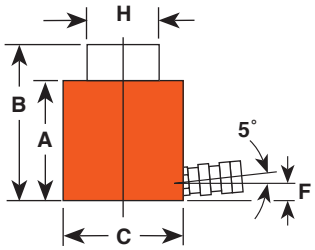

Cyl Capacity (Tons)	Stroke (mm)	Order No.	Oil Cap. (cm³) Push	Oil Cap. (cm³) Return	A Retracted Height (mm)	B Extended Height (mm)	C Outside Dia. (mm)	F Base to Port (mm)	H Piston Rod Dia. (mm)	Bore Dia. (mm)	Cylinder Effective Area (cm²)	Metric Tons at 700 (bar)	Weight (kg)
10	38,1	**RSS101**	56	–	88,9	127,0	69,9	15,9	38,1	42,9	14,4	10,2	2,7
20	44,5	**RSS202**	126	–	95,3	139,7	90,5	15,9	54,8	60,3	28,6	20,0	4,5
30	61,9	**RSS302**	259	–	117,5	179,4	101,6	15,9	63,5	73,0	41,9	29,5	6,7
50	60,3	**RSS502**	374	–	127,0	187,3	123,8	19,1	79,4	88,9	62,0	43,6	10,5
100	57,2	**RSS1002**	725	–	139,7	196,9	168,3	23,8	111,1	127,0	126,6	89,1	21,4
100	38,1	**RSS1002D**	482	212	144,5	182,6	174,6	23,8 *	95,3	127,0	126,6	89,1	24,7
250	376,2	**RSS2503**	2.469	–	290,5	366,7	250,8	46,0	139,7	203,2	323,9	227,8	99,7

*Cylinder top to port is 40 mm

See pages 30-35 & 110-123 for hydraulic accessories.

CYLINDER/PUMP MATCHING Page 6
ACCESSORY/REPAIR Page 36
PUMP/CYLINDER SETS Page 61
HYDRAULIC ACCESSORIES Page 120
VALVES Page 129
TECH DATA Page 237

Center Hole
CYLINDERS RH SERIES

10-100 Ton
Single-Acting,
Spring-Return

Ideal for pulling and tensioning of cables, anchor bolts, forcing screws, etc.

CYLINDERS

- Interchangeable piston head inserts (see page 41) provide versatility of application.
- 12, 20*, 30*, 50, 60 Ton Single-Acting Models Feature Threaded Collar
- Withstands full "dead-end" loads.
- Corrosion resistant standpipe has "Power Tech" treatment.
- All cylinders except RH120 are furnished with a 9796 3/8" NPT female half coupler.
- Aluminum cylinder body and piston are featured on the RHA306 cylinder.

* Model RH203 and RHA306 do not feature the collar thread. See the chart below.

ASME B30.1
700 BAR

10, 20, 100 Ton Single-Acting Models Feature Plain Collar

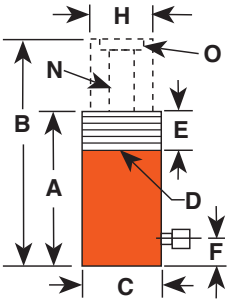

Cyl. Cap. (tons)	Stroke (mm)	Order No.	Oil Cap. (cm³)	A Re-tracted Height (mm)	B Ex-tended Height (mm)	C Outside Dia. (mm)	D Collar Thread (in.)	E Collar Thread Length (mm)	F Base to Port (mm)	H Piston Rod Dia. (mm)	N Center Hole Dia. (mm)	O Insert Thread and Size (in.)	Cylinder Effective Area (cm²)	Metric Tons at 700 bar	Weight (kg)
10	63,5	RH102	91	134,9	198,4	76,2	-	-	25,4	52,4	19,4	1 3/4-12	14,3	10,0	4,1
10	203,2	RH108	290	287,3	490,5	76,2	-	-	25,4	52,4	19,4	1 3/4-12	14,3	10,0	8,5
12	7,9	RH120**	14	55,6	63,5	69,9	2 3/4-16	31,8	9,5	34,9	17,5	3/4-16	17,8	12,5	1,4
12	41,3	RH121	74	122,2	163,5	69,9	2 3/4-16	31,8	25,4	34,9	20,2	-	17,8	12,5	3,0
12	41,3	RH121T**	74	122,2	163,5	69,9	2 3/4-16	31,8	25,4	34,9	17,5	3/4-16	17,8	12,5	3,0
12	76,2	RH123	136	184,2	260,4	69,9	2 3/4-16	20,6	25,4	34,9	20,6	-	17,8	12,5	4,0
20	50,8	RH202	155	155,6	206,4	98,4	3 7/8-12	38,1	25,4	54,0	27,4	1 9/16-16	30,4	21,4	7,3
20	76,2	RH203	193	154,0	230,2	101,6	-	-	25,4	69,9	26,6	2 1/4-12	25,3	17,8	9,1
20	152,4	RH206	465	308,0	460,4	98,4	3 7/8-12	38,1	25,4	54,0	27,4	1 9/16-16	30,4	21,4	13,7
30	63,5	RH302	260	158,8	222,3	120,7	4 3/4-12	38,1	29,4	82,6	32,9	2 3/4-12	40,9	28,8	11,6
30	149,2	RHA306	625	283,4	432,6	130,2	-	-	31,8	82,6	32,5	2 5/8-8	40,9	28,8	9,9
30	152,4	RH306	625	247,7	400,1	120,7	4 3/4-12	38,1	29,4	82,6	32,5	2 3/4-12	40,9	28,8	17,7
50	76,2	RH503	534	181,0	257,2	152,4	6-12	50,8	31,8	104,8	42,5	3 1/4-12	70,0	49,3	21,2
60	76,2	RH603*	607	235,0	311,2	158,8	6 1/4-12	63,5	25,4	91,3	54,0	3-12	79,4	55,9	27,2
60	152,4	RH606*	1.211	311,2	463,6	158,8	6 1/4-12	63,5	25,4	91,3	54,0	3-12	79,4	55,9	35,4
100	76,2	RH1003*	1.014	254,0	330,2	212,7	-	-	31,8	127,0	79,4	4 1/8-12	133,0	93,5	52,2

*Supplied with carrying handles.

Aluminum

** RH120 and RH121T do not have an internal threaded insert, but do have a 3/4-16 internal thread. The RH120 inlet port is 1/4" NPTF.

POWER TEAM

Center Hole
CYLINDERS RH SERIES

30-200 Ton
Double-Acting

Ideal for pulling and tensioning of cables, anchor bolts, forcing screws.

- Interchangeable piston head inserts (see page 41) provide versatility of application.
- Built-in safety feature prevents over-pressurization of the retract circuit.
- Plated piston rod resists wear; superior packings provide high cycle life without leakage.
- Corrosion-resistant standpipe has "Power Tech" treatment (see page 8).
- Each cylinder has 9796 $^{3}/_{8}$" NPTF female half couplers. The 60 ton thru 200 ton steel models are equipped with removable carrying handles.

ASME B30.1
700 BAR

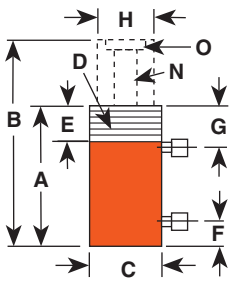

30, 60, 100 Ton
Double-Acting Models Feature
Threaded Collar

CYLINDERS

Cyl. Cap. (tons) Push	Cyl. Cap. (tons) Pull	Stroke (mm)	Order No.	Oil Cap. (cm³) Push	Oil Cap. (cm³) Pull	A Re-tracted Height (mm)	B Ex-tended Height (mm)	C Outside Dia. (mm)	D Collar Thread (in.)	E Collar Thread Length (mm)	F Base to Port (mm)	G Cylinder Top to Port (mm)	H Piston Rod Dia. (mm)	N Center Hole Dia. (mm)	Insert Thread Size (in.)	Mounting Holes (in.) and Bolt Circle (mm)	Cylinder Effective Area (cm²) Push	Cylinder Effective Area (cm²) Pull	Metric Tons at 700 bar Push	Metric Tons at 700 bar Pull	Weight (kg)
30	15	76,2	RH303	289	167	179,4	255,6	120,7	-	-	25,4	41,3	63,5	32,5	2-12	$^{3}/_{8}$-16 x 92,1	38,0	21,8	26,8	15,3	13,5
30	15	152,4	RH306D	580	333	281,0	433,4	120,7	-	-	25,4	41,3	63,5	32,5	2-12	$^{7}/_{16}$-20 x 92,1	38,0	21,8	26,8	15,3	20,4
30	20	257,2	RH3010	1.082	672	438,2	695,3	114,3	4 $^{1}/_{2}$-12	41	44,5	81,0	60,3	33,3	1 $^{7}/_{8}$-16	-	42,2	26,1	29,7	18,3	27,7
60	25	101,6	RHA604D	807	338	241,3	342,9	177,8	-	-	39,7	57,2	101,6	54,0	3-12	$^{1}/_{2}$-13 x 130,2	79,4	33,2	55,8	25,1	16,2
60	25	127,0	RH605*	1.009	423	241,3	368,3	165,9	-	-	25,4	44,5	101,6	54,0	3-12	$^{1}/_{2}$-13 x 130,2	79,4	33,2	55,8	25,1	33,1
60	40	257,2	RH6010*	2.181	1.427	458,8	716,0	158,8	6 $^{1}/_{4}$-12	47,6	54,0	81,8	92,1	54,4	3-16	-	84,8	55,4	59,6	38,9	54,5
100	45	38,1	RH1001*	526	233	165,1	203,2	212,7	-	-	31,8	58,7	127,0	79,8	4-16	$^{5}/_{8}$-11 x 177,8	138,0	60,8	97,0	42,7	38,6
100	50	152,4	RH1006*	1.971	1.076	314,3	466,7	184,2	-	-	37,3	59,1	111,1	52,4	-	$^{1}/_{2}$-13 x 139,7	129,2	70,5	90,8	49,6	43,1
NEW 100	45	257,2	RHA1008D	Contact factory for details and availability																	
100	45	257,2	RH10010*	3.552	1.556	495,3	752,5	215,9	8 $^{1}/_{2}$-12	57	63,5	91,7	139,7	79,8	4 $^{1}/_{2}$-12	-	138,0	60,8	97,0	42,7	109,0
150	70	127,0	RH1505*	2.475	1.207	311,2†	438,2	215,9	-	-	37,3	68,3	139,7	65,1	-	-	194,1	94,8	136,9	66,8	67,2
150	75	203,2	RH1508*	3.929	2.086	349,3	552,5	247,7	-	-	39,3	61,1	152,4	80,2	5-12	-	193,2	102,6	135,9	72,1	103,1
NEW 150	75	203,2	RHA1508D*	Contact factory for details and availability																	
200	75	203,2	RH2008*	5.307	2.093	408,0	611,2	273,1	-	-	57,2	81,8	190,5	103,2	6-12	1 $^{1}/_{4}$-12 x 198,1	260,9	102,9	183,5	72,4	142,0
NEW 200	75	203,2	RHA2008D*	Contact factory for details and availability																	

* Supplied with carrying handles.
† Measured with 19 mm high serrated insert installed.
See pages 36-41 & 120-133 for hydraulic accessories.

Aluminum

CYLINDER/PUMP MATCHING Page 6 | ACCESSORY/REPAIR Page 36 | PUMP/CYLINDER SETS Page 61 | HYDRAULIC ACCESSORIES Page 120 | VALVES Page 129 | TECH DATA Page 237

Center Hole
CYLINDERS RT SERIES

17½-100 Ton
Single- Acting, Spring-Return & Double-Acting

Ideal for pulling and pressing.

ASME B30.1
700 BAR

- A proven design; used throughout industry for over 40 years.
- Cylinders withstand full "dead-end" loads.
- Compact design; ideal for applications in which space is limited.
- Basic head can be changed from a tapped hole to plain hole by simply changing insert. (See page 41)
- Pistons have "Power Tech" treatment for corrosion and abrasion resistance.

RT 302

CYLINDERS

Dimensions for reference only.
Single-Acting, Spring-Return Cylinders

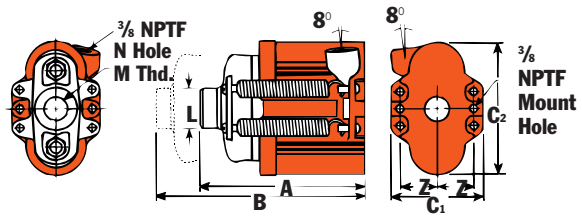

Double-Acting Cylinder (RT1004)

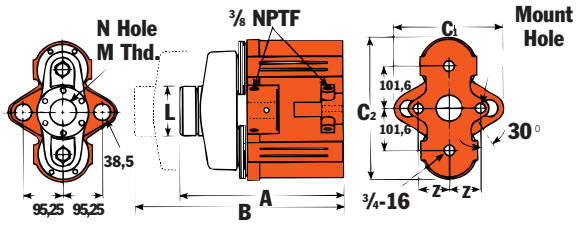

RT 302

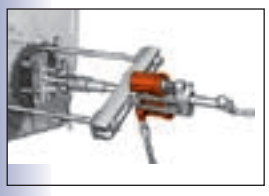

Cyl. Capacity (Tons) Push	Stroke (mm)	Order No.	Oil Cap. (cm³) Push	Oil Cap. (cm³) Return	A Re-tracted Height (mm)	B Ex tended Height (mm)	C1 Out-side Dia. (mm)	C2 Out-side Dia. (mm)	L Load Cap Dia. (mm)	M Load Cap Thread (in.)	N Center Hole Dia. (mm)	Z Mounting Hole Location (mm)	Mounting Hole (mm)	Cyl. Eff. Area (cm²)	Metric Tons at 700 bar	Weight (kg)
17,5	50,8	RT172	116	-	174,6	225,4	95,3	146,1	44,5	1-8	27,0	38,1	8,7	22,8	16,1	6,6
30	63,5	RT302	258	-	214,3	277,8	108,0	190,5	57,2	1 ¼-7	32,9	46,0	11,9	40,5	28,5	12,8
50	76,2	RT503	482	-	268,3	344,5	149,2	238,1	73,0	1 ⅝-5 ½	42,5	60,3	16,7	63,3	44,5	25,4
100	123,8	RT1004**	1.583	1.037	384,2	508,0	266,7	336,6	120,7	2 ½-8	65,1	73,0	19,8	124,1*	87,3	72,6

* Push side only.
** The RT1004 has a bypass when full stroke is reached, preventing over-pressurization of the cylinder.

NOTE: Each cylinder complete with threaded cylinder head insert, cylinder half coupler and cylinder attaching screws.

CYLINDER/PUMP MATCHING Page 6
ACCESSORY/REPAIR Page 36
PUMP/CYLINDER SETS Page 61
HYDRAULIC ACCESSORIES Page 120
VALVES Page 129
TECH DATA Page 237

Pulling
CYLINDERS RP SERIES

2 & 5 Ton
Single-Acting, Spring-Return

Designed for pulling and tensioning.

CYLINDERS

RP55

RP25

- Heavy duty compression spring provides long cycle life and rapid extension of piston.
- Spring automatically extends piston rod when pump pressure is released.

ASME B30.1
700 BAR

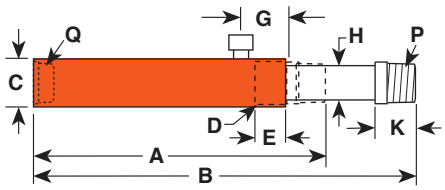

Cyl. Cap. (Tons) Pull	Stroke (mm)	Order No.	Oil Cap. (cm³)	A Re-tracted Height (mm)	B Ex-tended Height (mm)	C Outside Dia. (mm)	D Collar Thread (in.)	E Collar Thread Length (mm)	G Cylinder Top to Port (mm)	H Piston Rod Dia. (mm)	K Piston Rod Protrusion (mm)	P Piston Rod Thread (NPTF)	Q Base Thread (NPTF)	Bore Dia. (mm)	Cyl. Eff. Area (cm²) Pull	Metric Tons at 700 bar Pull	Weight (kg)
2	127,0	**RP25**	45	242,9	379,9	44,5	1 1/2-16	25,4	42,9	19,1	25,4	3/4-14	3/4-14	28,6	3,5	2,5	1,8
5	139,7	**RP55**	102	301,6	441,3	57,2	2 1/4-14	25,4	42,9	30,2	34,9	1 1/4-11 1/2	1 1/4-11 1/2	42,9	7,3	5,1	5

Clevis

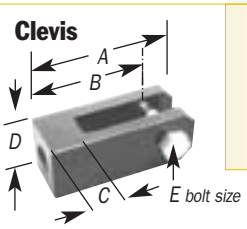

Clevis ORDERING INFORMATION

Use with Cyl No.	Order No.	A (mm)	B (mm)	C (mm)	D (mm)	E (mm)
RP25	421057*	130,3	109,5	33,3	50,8	19,1
RP55	421056**	152,4	127,0	38,1	63,5	22,4

* For base mounting, extension rod **351106** is required.
** For base mounting, extension rod **351075** is required.

CYLINDER/PUMP MATCHING Page 6
ACCESSORY/REPAIR Page 36
PUMP/CYLINDER SETS Page 61
HYDRAULIC ACCESSORIES Page 120
VALVES Page 129
TECH DATA Page 237

Double Acting
CYLINDERS RD SERIES

10-500 Ton
Double Acting,
Hydraulic-Return

High tonnage premium design
for high cycle life.

CYLINDERS

- Perfect for bridge lifting, building reconstruction, shipyard, utility and mining equipment maintenance.
- Aluminum bronze overlay bearings provide long life, chrome plated piston rod resist corrosion.
- Load cap snaps out to expose internal piston rod threads for pulling applications; threads withstand full tonnage.
- Grooved ring pattern in load cap helps guard against load slippage.
- Each cylinder has two 9796 3/8" NPTF female half couplers.
- Built-in safety relief valve prevents over-pressurization of the retract circuit.
- Feature mounting holes and collar threads.

RD556

RD10013

ASME B30.1
700 BAR

RD30013

CYLINDER/PUMP MATCHING Page 6
ACCESSORY/REPAIR Page 36
PUMP/CYLINDER SETS Page 61
HYDRAULIC ACCESSORIES Page 120
VALVES Page 129
TECH DATA Page 237

Features of RD Series Cylinders

Four special ordered 500 ton, 610 mm stroke cylinders used in a swaging press for crimping 89 mm wire rope.

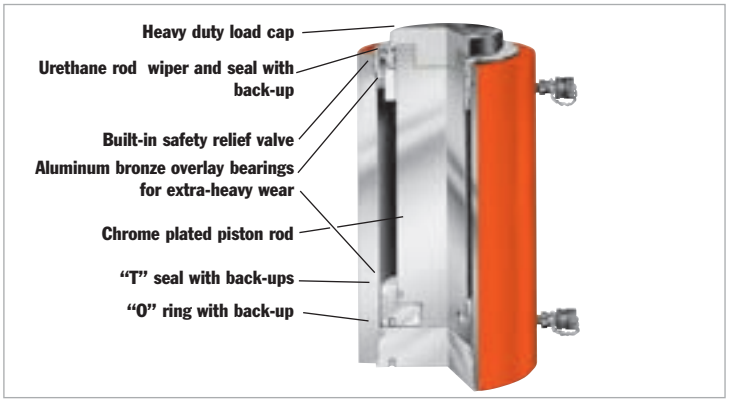

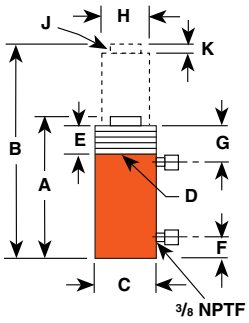

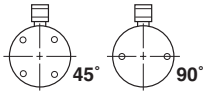

Base mounting holes see page 237.

Threads withstand full load.

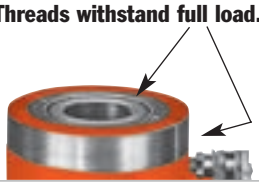

Cyl. Cap. (tons) Push	Cyl. Cap. (tons) Pull	Stroke (mm)	Order No.	Oil Capacity (cm³) Push	Oil Capacity (cm³) Pull	A Retracted Height (mm)	B Extended Height (mm)	C Outside Dia. (mm)	D Collar Thread Size (in.)	E Thread Length Thread (mm)	F Base to Port trusion (mm)	G Cylinder Piston Top to Port (mm)	H Piston Rod Dia. (mm)	J Rod Int. (in) and Depth (mm)	K Piston Rod Protrusion (mm)	Load Cap Dia. (mm)	Bore Dia. (mm)	Cyl. Eff. Area (cm²) Push	Cyl. Eff. Area (cm²) Pull	Metric Tons at 700 bar Push	Metric Tons at 700 bar Pull	Weight (kg)
10	4	158,8	**RD106**	228	90	296,9	455,6	76,2	2 3/4-12	41,3	25,4	63,5	33,3	1-8 x 25,4	6,4	34,9	42,9	14,4	5,7	10,2	4,0	10,0
10	4	254,0	**RD1010**	366	144	398,5	652,5	76,2	2 3/4-12	41,3	25,4	63,5	33,3	1-8 x 25,4	6,4	34,9	42,9	14,4	5,7	10,2	4,0	12,7
25	8	158,8	**RD256**	528	166	314,3	473,1	101,6	4-12	41,3	25,4	63,5	54,0	1 1/2-16 x 25,4	9,5	54,0	65,1	33,2	10,4	23,4	7,3	18,1
25	8	362,0	**RD2514**	1.205	376	517,5	879,5	101,6	4-12	41,3	25,4	63,5	54,0	1 1/2-16 x 25,4	9,5	54,0	65,1	33,2	10,4	23,4	7,3	29,5
55	28	158,8	**RD556**	1.132	577	329,4	488,2	127,0	5-12	41,3	33,3	63,5	66,7	1 11/16-8 x 30,2	15,9	66,7	95,3	71,2	36,3	50,1	25,6	27,9
55	28	333,4	**RD5513**	2.376	1.212	504,0	837,4	127,0	5-12	41,3	33,3	63,5	66,7	1 11/16-8 x 30,2	15,9	66,7	95,3	71,2	36,3	50,1	25,6	40,9
55	28	460,4	**RD5518**	3280	1.673	657,2	1.117,6	127,0	5-12	41,3	33,3	63,5	66,7	1 11/16-8 x 30,2	15,9	66,7	95,3	71,2	36,3	50,1	25,6	64,5
80	44	333,4	**RD8013**	3421	1.901	517,5	850,9	146,1	5 3/4-12	41,3	38,1	63,5	76,2	2-4 1/2 x 38,1	14,3	73,0	114,3	102,6	57,0	72,1	40,1	53,6
100	44	168,3	**RD1006**	2.242	959	350,0	518,3	174,6	6 7/8-12	41,3	38,1	63,5	98,4	2 3/4-12 x 29,4	15,9	98,4	130,2	133,1	57,0	93,5	40,1	57,2
100	44	333,4	**RD10013**	4.440	1.902	515,1	848,5	174,6	6 7/8-12	41,3	38,1	63,5	98,4	2 3/4-12 x 29,4	15,9	98,4	130,2	133,1	57,0	93,5	40,1	82,2
100	44	511,2	**RD10020**	6.809	2.919	718,3	1.229,5	174,6	6 7/8-12	41,3	38,1	63,5	98,4	2 3/4-12 x 29,4	15,9	98,4	130,2	133,1	57,0	93,5	40,1	118,0
150	73	168,3	**RD1506**	3.334	1.606	377,8	546,1	209,6	8 1/4-12	41,3	50,8	63,5	114,3	3 1/4-8 x 38,1	20,6	114,3	158,8	197,9	95,3	139,1	66,9	85,4
150	73	333,4	**RD15013**	6.604	3.180	542,9	876,3	209,6	8 1/4-12	41,3	50,8	63,5	114,3	3 1/4-8 x 38,1	20,6	114,3	158,8	197,9	95,3	139,1	66,9	123,5
150	73	460,4	**RD15018**	9.132	4.392	673,9	1.134,3	209,6	8 1/4-12	41,3	50,8	63,5	114,3	3 1/4-8 x 38,1	19,1	114,3	158,8	197,9	95,3	139,1	66,9	170,7
200	113	168,3	**RD2006**	4.485	2.457	406,4	574,7	241,3	9 1/2-12	41,3	63,5	68,3	123,8	3 1/4-8 x 57,1	27,0	114,3	184,2	266,3	145,9	187,2	102,6	118,9
200	113	333,4	**RD20013**	8.886	4.869	571,5	904,9	241,3	9 1/2-12	41,3	63,5	68,3	123,8	3 1/4-8 x 57,1	27,0	114,3	184,2	266,3	145,9	187,2	102,6	161,6
200	113	460,4	**RD20018**	12.270	6.722	723,9	1.184,3	241,3	9 1/2-12	41,3	63,5	68,3	123,8	3 1/4-8 x 57,1	27,0	114,3	184,2	266,3	145,9	187,2	102,6	200,7
300	147	152,4	**RD3006**	5.920	2.903	488,9	591,3	273,1	10 1/2-12	60,3	85,7	85,7	158,8	2 1/2-12 x 82,5	28,6	174,6	222,3	387,8	190,0	272,7	133,6	172,5
300	147	330,2	**RD30013**	12.825	6.281	630,2	960,4	273,1	10 1/2-12	60,3	85,7	85,7	158,8	2 1/2-12 x 82,5	28,6	174,6	222,3	387,8	190,0	272,7	133,6	296,9
400	186	152,4	**RD4006**	7.724	4.051	489,7	642,1	320,7	12 1/2-8	69,9	97,6	97,6	184,2	3-12 x 92,2	31,8	198,4	254,0	506,6	240,3	356,2	169,0	265,6
400	186	330,2	**RD40013**	16.744	8.790	667,5	997,7	320,7	12 1/2-8	69,9	97,6	97,6	184,2	3-12 x 92,2	31,8	198,4	254,0	506,6	240,3	356,2	169,0	349,6
500	245	152,4	**RD5006**	9.774	4.838	522,3	674,7	374,7	14 3/4-8	79,4	105,6	105,6	203,2	3 1/4-12 x 107,9	38,1	215,9	285,8	641,1	317,0	450,8	222,8	371,8
500	245	330,2	**RD50013**	21.189	10.480	700,1	1.030,3	374,7	14 3/4-8	79,4	105,6	105,6	203,2	3 1/4-12 x 107,9	38,1	215,9	285,8	641,1	317,0	450,8	222,8	495,8

High Tonnage
CYLINDERS R SERIES

55-565 Ton
Single-Acting
Load-Return

High-tonnage, low cycle, gravity return.

CYLINDERS

- Visible indicator band alerts when stroke limit is reached; overflow port ("weep hole") stroke limiter prevents piston from being overextended.
- Alloy heat treated piston and body for reliability and strength.
- Plated piston rod increase corrosion resistance and give superior bearing qualities.

R1502C

ASME B30.1
700 BAR

R2802C

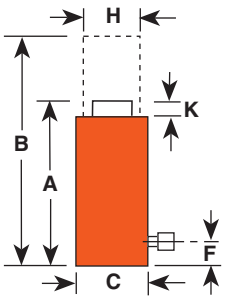

Cyl. Cap. (tons)	Stroke (mm)	Order No.	Oil Cap. (cm³)	A Retracted Ht. (mm)	B Extended Ht. (mm)	C Outside Dia. (mm)	F Base to Port (mm)	H Piston Rod Dia. (mm)	K Rod Protrusion (mm)	Piston Bore Dia. (mm)	Effective Area (cm²)	Metric Tons at 700 bar	Weight (kg)
55	50,8	**R552C**	362	125,4	176,2	127,0	25,4	95,3	3,2	95,3	71,2	50,1	12,3
55	152,4	**R556C**	1.087	227,0	379,4	127,0	25,4	95,3	3,2	95,3	71,2	50,1	22,7
55	254,0	**R5510C**	1.811	328,6	582,6	127,0	25,4	95,3	3,2	95,3	71,2	50,1	32,7
100	50,8	**R1002C**	677	139,7	190,5	165,1	25,4	130,2	3,2	130,2	133,1	93,6	23,6
100	152,4	**R1006C**	2.030	241,3	393,7	165,1	25,4	130,2	3,2	130,2	133,1	93,6	40,4
150	50,8	**R1502C**	1.007	161,9	212,7	204,8	31,8	158,8	3,2	158,8	197,9	139,1	41,8
150	152,4	**R1506C**	3.019	263,5	415,9	204,8	31,8	158,8	3,2	158,8	197,9	139,1	68,6
150	254,0	**R15010C**	5.032	365,1	619,1	204,8	31,8	158,8	3,2	158,8	197,9	139,1	95,3
200	50,8	**R2002C**	1.355	190,5	241,3	235,0	41,3	184,2	3,2	184,2	266,3	187,2	65,8
200	152,4	**R2006C**	4.062	292,1	444,5	235,0	41,3	184,2	3,2	184,2	266,3	187,2	100,3
280	50,8	**R2802C**	1861	190,5	241,3	260,4	41,3	215,9	3,2	215,9	365,9	257,5	91,6
280	152,4	**R2806C**	5583	292,1	444,5	276,2	41,3	215,9	3,2	215,9	365,9	257,5	136,7
355	50,8	**R3552C**	2.326	231,8	282,6	298,5	54,0	241,3	3,2	241,3	457,2	321,4	137,1
355	152,4	**R3556C**	6.975	333,4	485,8	298,5	54,0	241,3	3,2	241,3	457,2	321,4	197,0
355	254,0	**R35510C**	11.624	435,0	689,0	298,5	54,0	241,3	3,2	241,3	457,2	321,4	256,5
430	50,8	**R4302C**	2.841	263,5	314,3	330,2	63,5	266,7	3,2	266,7	558,5	392,7	199,8
430	152,4	**R4306C**	8.520	365,1	517,5	330,2	63,5	266,7	3,2	266,7	558,5	392,7	276,5
565	50,8	**R5652C**	3.710	292,1	342,9	377,8	69,9	304,8	3,2	304,8	729,5	512,9	289,7
565	152,4	**R5656C**	11.129	393,7	546,1	377,8	69,9	304,8	3,2	304,8	729,5	512,9	389,5
565	254,0	**R56510C**	18.548	495,3	749,3	377,8	69,9	304,8	3,2	304,8	729,5	512,9	489,4

High Tonnage
CYLINDER RC SERIES

740 - 1220 Ton
Single-Acting,
Load Return

High-tonnage, low cycle, gravity return.

NEW

- Overflow port ("weep hole") prevents piston from being overextended under load.
- Alloy heat treated piston and body for reliability and strength.
- Plated piston rod increase corrosion resistance and give superior bearing qualities.

CYLINDERS

Single-Acting High Tonnage Cylinders

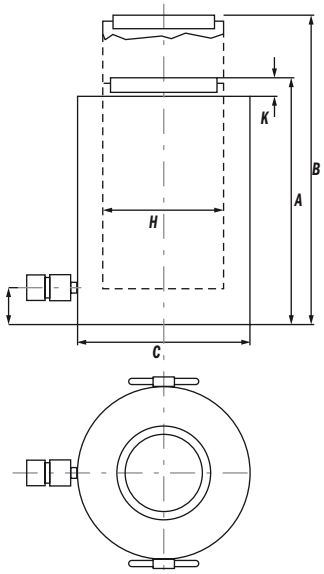

Swivel Cap

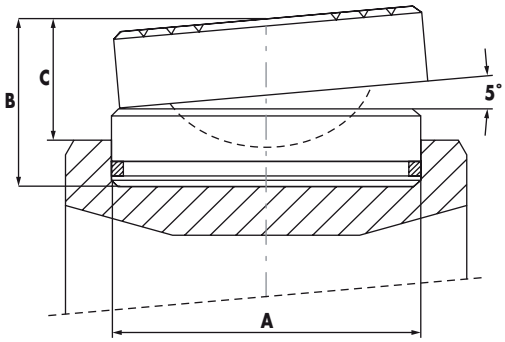

Order No.	Used with Cyl. Order No.	A mm	B mm	C mm	Product Wt. kg
2000824	RC740*C, RC965*C	290	140	99	72
2000825	RC1220*C	323	175	124	113

In mm Cyl. Cap. (tons)	Stroke (mm)	Order No.	Oil Cap. (cm³)	A Retracted Height (mm)	B Extended Height (mm)	C Outside Dia. (mm)	F Base to Port (mm)	H Piston Rod Dia. (mm)	K Piston Rod Protrusion (mm)	Bore Dia. (mm)	Cyl. Effective Area (cm²)	Tons @ 700 bar	Product Wt. (kg)
740	50	RC7402C	4.811	265	315	430	65	350	9	350	962	673,5	300
740	150	RC7406C	14.132	365	515	430	65	350	9	350	962	673,5	416
740	250	RC74010C	24.053	465	715	430	65	350	9	350	962	673,5	530
965	50	RC9652C	6.283	290	340	490	70	400	10	400	1.256,6	879,7	423
965	150	RC9656C	18.850	390	540	490	70	400	10	400	1.256,6	879,7	577
965	250	RC96510C	31.416	490	740	490	70	400	10	400	1.256,6	879,7	725
1220	50	RC12202C	7.952	415	465	550	80	450	10	450	1.590,4	1.113,3	766
1220	150	RC12206C	23.856	440	665	550	80	450	10	450	1.590,4	1.113,3	960
1220	250	RC122010C	39.761	615	865	550	80	450	10	450	1.590,4	1.113,3	1.147

CYLINDER/PUMP MATCHING Page 6
ACCESSORY/REPAIR Page 36
PUMP/CYLINDER SETS Page 61
HYDRAULIC ACCESSORIES Page 120
VALVES Page 129
TECH DATA Page 237

High Tonnage
CYLINDERS R SERIES

100-565 Ton
Double-Acting,
Hydraulic-Return

High-tonnage, low cycle, hydraulic return.

CYLINDERS

- Cylinders come standard with swivel caps to reduce the effects of off-center loading.
- Cylinders may be "dead-ended" without damage.
- Hard chrome plated, heat treated piston rod reduces wear on piston and gland nut.
- Built-in safety relief valve prevents over-pressurization of the retract circuit.
- Each cylinder has two 9796 3⁄8" NPTF female half couplers.

R1502D

R2806D

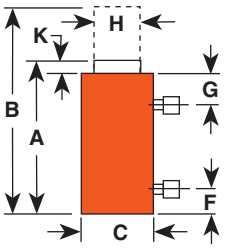

Cyl. Cap. (tons)	Stroke (mm)	Order No.	Oil Capacity (cm³) Push	Oil Capacity (cm³) Return	A Re-tracted Height (mm)	B Ex-tended Height (mm)	C Outside Dia. (mm)	F Base to Port (mm)	G Cylinder Top to Port (mm)	H Piston Rod Dia. (mm)	K Piston Rod Protrusion (mm)	Bore Dia. (mm)	Cylinder Effective Area (cm²) Push	Metric Tons at 700 bar Push	Weight (kg)
100	50,8	**R1002D**	676	315	168,7	219,5	165,1	25,4	56,0	95,3	7,1	130,2	132,9	93,4	24,5
100	152,4	**R1006D**	2.027	945	270,3	422,7	165,1	25,4	56,0	95,3	7,1	130,2	132,9	93,4	36,8
NEW 100	152,4	**RA1006D**	Contact factory for details and availability												
100	254,0	**R10010D**	3.378	1.574	371,9	625,9	165,1	25,4	56,0	95,3	7,1	130,2	132,9	93,4	49,0
150	50,8	**R1502D**	1.007	485	188,9	239,7	204,8	31,8	57,2	114,3	7,5	158,8	198,0	139,1	43,1
NEW 150	152,4	**RA1506D**	Contact factory for details and availability												
150	152,4	**R1506D**	3.021	1.456	290,5	442,9	204,8	31,8	57,2	114,3	7,5	158,8	198,0	139,1	61,7
200	50,8	**R2002D**	1.355	643	206,8	257,6	235,0	41,3	58,7	133,4	8,7	184,2	266,4	187,2	61,7
NEW 200	152,4	**RA2006D**	Contact factory for details and availability												
200	152,4	**R2006D**	4.064	1.929	308,4	460,8	235,0	41,3	58,7	133,4	8,7	184,2	266,4	187,2	84,9
200	254,0	**R20010D**	6.773	3.214	410,0	664,0	235,0	41,3	58,7	133,4	8,7	184,2	266,4	187,2	108,5
280	50,8	**R2802D**	1861	774	233,8	284,6	276,2	47,6	65,5	165,1	10,3	215,9	365,7	257,3	99,4
280	152,4	**R2806D**	5.579	2.322	335,4	447,8	276,2	47,6	65,5	165,1	10,3	215,9	365,7	257,3	134,8
280	254,0	**R28010D**	9.299	3.870	437,0	691,0	276,2	47,6	65,5	165,1	10,3	215,9	365,7	257,3	170,7
355	50,8	**R3552D**	2.326	777	288,9	339,7	298,5	54,0	69,9	196,9	11,1	241,3	457,3	321,4	147,0
355	152,4	**R3556D**	6.977	2.332	390,5	542,9	298,5	54,0	69,9	196,9	11,1	241,3	457,3	321,4	191,1
430	50,8	**R4302D**	2.840	977	312,7	363,5	330,2	63,5	75,0	215,9	11,9	266,7	558,6	392,7	199,3
430	152,4	**R4306D**	8.521	2.932	414,3	566,7	330,2	63,5	75,0	215,9	11,9	266,7	558,6	392,7	253,3
430	254,0	**R43010D**	14.202	4.887	515,9	769,9	330,2	63,5	75,0	215,9	11,9	266,7	558,6	392,7	305,5
565	50,8	**R5652D**	3.710	1.260	345,3	396,1	377,8	69,9	81,4	247,7	13,9	304,8	729,5	512,9	281,0
565	152,4	**R5656D**	11.129	3.779	446,9	599,3	377,8	69,9	81,4	247,7	13,9	304,8	729,5	512,9	350,4
565	254,0	**R56510D**	18.548	6.298	548,5	802,5	377,8	69,9	81,4	247,7	13,9	304,8	729,5	512,9	420,4

High Tonnage
CYLINDER RC SERIES

740 & 1220
Double-Acting, Hydraulic Return

High Tonnage Cylinders
Rugged And Reliable!

NEW

- Cylinders come standard with hardened caps.
- Otional swivel caps to reduce the effects of off-center loading.
- Cylinders may be “dead-ended” without damage.
- Safety relief valve prevents over-pressurization of the retract circuit.
- Each cylinder has two 9796 3⁄8" NPTF female half couplers.

CYLINDERS

Double-Acting High Tonnage Cylinders

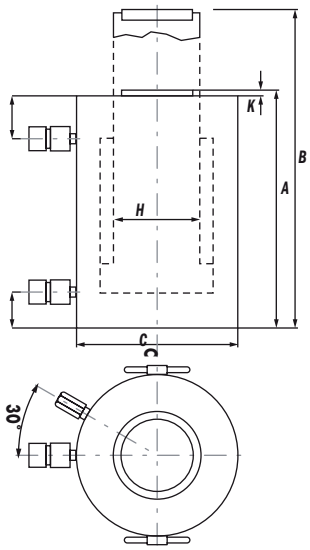

Swivel Cap

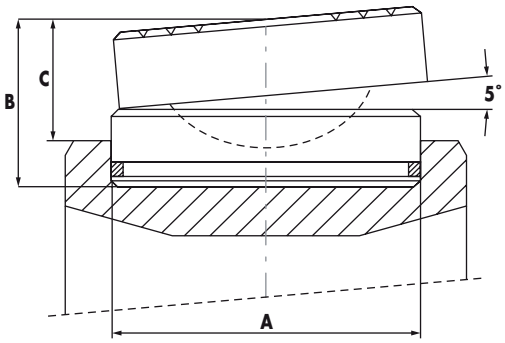

Order No.	Used with Cyl. Order No.	A mm	B mm	C mm	Product Wt. kg
2000822	**RC740*D**	200,1	78,7	55,9	19,3
2000823	**RC965*D**	248,9	104,1	76,2	40
2000825	**RC1220*D**	322,6	175,3	124,5	113

In mm Cyl. Cap. (tons)	Stroke (mm)	Order No.	Oil Cap. (cm³)	A Retracted Height (mm)	B Extended Height (mm)	C Outside Dia. (mm)	F Base to Port (mm)	G Cyl. Top to Port (mm)	H Piston Rod Dia. (mm)	K Piston Rod Protrusion (mm)	Cyl. Effective Area (cm2)	700 bar	Product Wt.
740	50	**RC7402D**	4.811	283	333	430	65	100	280	9	962,0	673,5	304
740	150	**RC7406D**	14.132	398	548	430	65	100	280	9	962,0	673,5	398
740	250	**RC74010D**	24.053	508	758	430	65	100	280	9	962,0	673,5	490
965	50	**RC9652D**	6.283	310	360	490	70	115	320	10	1.256,6	879,7	434
965	150	**RC9656D**	18.850	420	570	490	70	115	320	10	1.256,6	879,7	551
965	250	**RC96510D**	31.416	530	780	490	70	115	320	10	1.256,6	879,7	668
1220	50	**RC12202D**	7.952	330	380	550	80	135	360	10	1.590,4	1.113,3	584
1220	150	**RC12206D**	23.856	440	590	550	80	135	360	10	1.590,4	1.113,3	731
1220	250	**RC122010D**	39.761	550	800	550	80	135	360	10	1.590,4	1.113,3	878

Locking Collar
CYLINDER RL SERIES– ALUMINUM

55 & 100 Ton
Single- Acting, Spring-Return

Positive mechanical lock to support load.

CYLINDERS

RA1006L

- Support lifted load for extended periods of time with hydraulic pressure released.
- At half the weight of steel cylinders of comparable capacity, aluminum cylinders are ideal when portability is a key factor.
- Feature carrying handle.

ASME B30.1
700 BAR

RA556L

Locking collar feature permits non-hydraulic support of load.

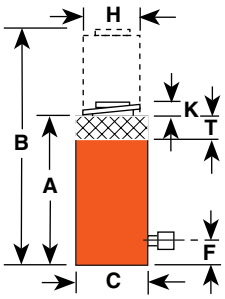

Cyl. Cap. (tons)	Stroke (mm)	Order No.	Oil Cap. (cm³)	A Retracted Ht. (mm)	B Extended Ht. (mm)	C Outside Dia. (mm)	F Base to Port (mm)	H Piston Rod Dia. (mm)	K Piston Rod Protrusion (mm)	Nut Thickness (mm)	T Bore Dia. (mm)	Cylinder Effective Area (cm²)	Metric Tons at 700 bar	Weight (kg)
55	155,5	**RA556L**	1.109	317,5	473,1	133,4	34,9	82,6	12,7	38,1	95,3	71,2	50,1	13,4
100	158,8	**RA1006L**	2.116	339,7	498,5	187,3	30,2	114,3	6,4	38,1	130,2	133,0	93,5	29,1
NEW 150	50,8	**RA1502L**		Contact factory for details and availability										
NEW 150	152,4	**RA1506L**		Contact factory for details and availability										
NEW 200	50,8	**RA2002L**		Contact factory for details and availability										
NEW 200	152,4	**RA2006L**		Contact factory for details and availability										

Note: Supported loads not to exceed the rated capacity of the cylinders. Not intended to support additional dynamic loads, such as those applied by moving vehicles.

Pancake Cylinders
LOCKING COLLAR RC SERIES

55 & 620 Ton
Single- Acting, Load-Return

Positive mechanical lock to support load.

- Compact design - for use where space is limited
- Locking collar designed to support lifted load for extended periods of time with hydraulic pressure relesed
- Integral tilt saddle standard improves performance under side load
- Overflow port ("weep hole") prevents piston from being overextended under load.
- Special coating improves corrosion and abrasion resistance.
- Cylinders come standard with hardened caps. Optional swivel caps reduce the effects of off-center loading Single-Acting Locking Collar Cylinders
- Equipped with 3⁄8" NPTF female half couplers

NEW

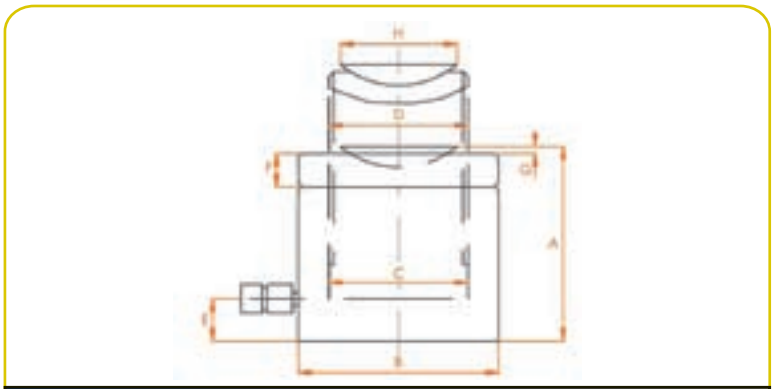

Cyl. Cap. (tons)	Stroke (mm)	Order No.	Oil Cap. (cm^3)	A Retracted Height (mm)	B Outside Dia. (mm)	C Piston Rod Dia. (mm)	D Bore Dia. (mm)	E Base to Port (mm)	F Nut Thickness (mm)	G Swivel Cap Protrusion (mm)	H Swivel Cap Dia. (mm)	C Wt. (kg)
55	50	RC0552P	355	125	120	95	95	19	21	6	92	11
100	45	RC1002P	597	137	165	130	130	21	31	8	126	22
155	45	RC1552P	905	148	205	160	160	27	38	9	148	39
240	45	RC24022P	1.413	155	255	200	200	28	40	10	157	59
380	45	RC3802P	2.208	178	320	250	250	35	50	11	240	110
620	45	RC6202P	3.618	192	405	320	320	38	60	10	295	193

Locking Collar
CYLINDER RL SERIES STEEL

55 -565 Ton
Single- Acting, Load-Return

Positive mechanical lock to support load.

- Support lifted load for extended periods of time with hydraulic pressure released.
- Visible indicator band alerts when stroke limit is reached; overflow port ("weep hole") stroke limiter prevents piston from being overextended.
- All cylinders feature coated pistons to resist corrosion and abrasion.

R556L

CYLINDERS


Locking collar feature permits non-hydraulic support of load.

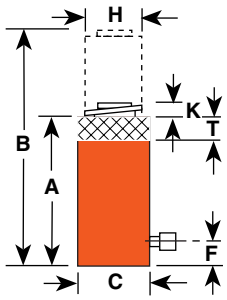

Cyl. Cap. (tons)	Stroke (mm)	Order No.	Oil Cap. (cm³)	A Retracted Ht. (mm)	B Extended Ht. (mm)	C Outside Dia. (mm)	F Base to Port (mm)	H Piston Rod Dia. (mm)	K Piston Rod Protrusion (mm)	T Nut Thickness (mm)	Bore Dia. (mm)	Cylinder Effective Area (cm²)	Metric Tons at 700 bar	Weight (kg)
55	50,8	**R552L**	362	161,9	212,7	125,4	25,4	95,3	3,2	36,5	95,3	71,2	50,1	15,3
55	152,4	**R556L**	1.087	263,5	415,9	125,4	25,4	95,3	3,2	36,5	95,3	71,2	50,1	26,3
55	254,0	**R5510L**	1.811	365,1	619,1	125,4	25,4	95,3	3,2	36,5	95,3	71,2	50,1	36,3
100	50,8	**R1002L**	677	184,2	235,0	165,1	25,4	130,2	3,2	44,5	130,2	133,1	93,4	30,0
100	152,4	**R1006L**	2.030	285,8	438,2	165,1	25,4	130,2	3,2	44,5	130,2	133,1	93,4	46,8
100	254,0	**R10010L**	3.383	387,4	641,4	165,1	25,4	130,2	3,2	44,5	130,2	133,1	93,4	64,5
150	50,8	**R1502L**	1.007	206,4	257,2	204,8	31,8	158,8	3,2	44,5	158,8	197,9	139,1	53,0
150	152,4	**R1506L**	3.019	308,0	460,4	204,8	31,8	158,8	3,2	44,5	158,8	197,9	139,1	80,4
200	50,8	**R2002L**	1.355	241,3	292,1	235,0	41,3	184,2	3,2	50,8	184,2	266,3	187,2	83,1
200	152,4	**R2006L**	4.062	342,9	495,3	235,0	41,3	184,2	3,2	50,8	184,2	266,3	187,2	117,6
280	50,8	**R2802L**	1.861	247,7	298,5	276,2	41,3	215,9	3,2	57,2	215,9	366,0	257,3	118,5
280	152,4	**R2806L**	5.583	349,3	501,7	276,2	41,3	215,9	3,2	57,2	215,9	366,0	257,3	163,0
280	254,0	**R28010L**	9.305	450,9	704,9	276,2	41,3	215,9	3,2	57,2	215,9	366,0	257,3	208,1
355	50,8	**R3552L**	2.326	292,1	342,9	298,5	54,0	241,3	3,2	60,3	214,3	457,2	321,4	173,0
355	152,4	**R3556L**	6.975	393,7	546,1	298,5	54,0	241,3	3,2	60,3	241,3	457,2	321,4	232,5
430	50,8	**R4302L**	2.841	333,4	384,2	330,2	63,5	266,7	3,2	69,9	266,7	558,5	392,7	252,4
430	152,4	**R4306L**	8.520	435,0	587,4	330,2	63,5	266,7	3,2	69,9	266,7	558,5	392,7	329,2
430	254,0	**R4310L**	14.201	536,6	790,6	330,2	63,5	266,7	3,2	69,9	266,7	558,5	392,7	405,9
565	50,8	**R5652L**	3.710	371,2	422,3	377,8	69,9	304,8	3,2	79,4	304,8	729,5	512,9	368,2
565	152,4	**R5656L**	11.129	473,1	625,5	377,8	69,9	304,8	3,2	79,4	304,8	729,5	512,9	468,0
565	254,0	**R56510L**	18.548	574,7	828,7	377,8	69,9	304,8	3,2	79,4	304,8	729,5	512,9	568,0

•NOTE: Supported loads not to exceed the rated capacity of the cylinders. Not intended to support additional dynamic loads, such as those applied by moving vehicles.

CYLINDER/PUMP MATCHING Page 6
ACCESSORY/REPAIR Page 36
PUMP/CYLINDER SETS Page 61
HYDRAULIC ACCESSORIES Page 120
VALVES Page 129
TECH DATA Page 237

Locking Collar
CYLINDER RC SERIES

740 & 1220
Single-Acting,
Load Return

Positive mechanical lock
to support load.

Single-Acting Locking Collar Cylinders

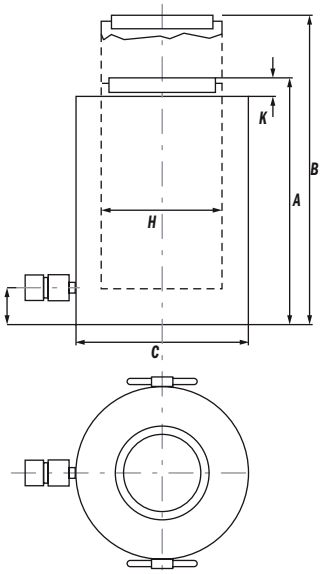

Swivel Cap

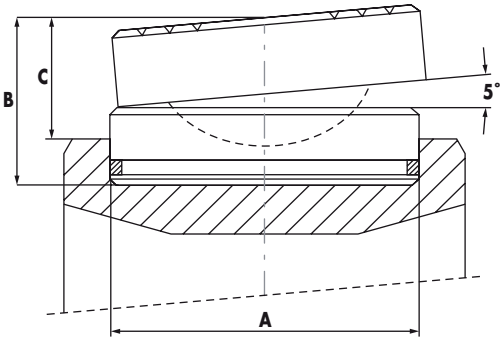

Order No.		A mm	B mm	C mm	Product Wt. kg
2000824	**RC740*L, RC965*L**	290	140	99	72
2000825	**RC1220*L**	323	175	124	113

Cyl. Cap. (tons)	Stroke (mm)	Order No.	Oil Cap. (mm^3)	A Retracted Height (mm)	B Extended Height (mm)	C Outside Dia. (mm)	F Base to Port (mm)	H Piston Rod Dia. (mm)	K Piston Rod Protrusion (mm)	Bore Dia. (mm)	Cyl. Effective Area (mm^2)	Tons @ 700 bar	Product Wt. (kg)
740	50	**RC7402L**	4.811	395	445	475	90	TR350X6	5	350	962,0	673,5	545
740	150	**RC7406L**	14.432	495	645	475	90	TR350X6	5	350	962,0	673,5	683
740	250	**RC74010L**	24.053	595	845	475	90	TR350X6	5	350	962,0	673,5	821
965	50	**RC9652L**	6.280	455	505	540	100	TR400X6	5	400	1.256,6	879,7	714
962	150	**RC9656L**	18.849	555	705	540	100	TR400X6	5	400	1.256,6	879,7	990
962	250	**RC96510L**	31.400	635	885	540	100	TR400X6	5	400	1.256,6	879,7	1.170
1220	50	**RC12202L**	7.949	443	493	600	110	TR450X6	5	450	1.590,4	1.113,3	969
1220	150	**RC12206L**	23.856,5	598	748	600	110	TR450X6	5	450	1.590,4	1.113,3	1.310
1220	250	**RC122010L**	39.741	698	948	600	110	TR450X6	5	450	1.590,4	1.113,3	1.530

Mounting accessories
C Series

Threaded Connector

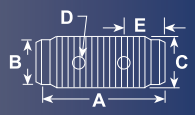

Cylinder Tons	Part No.	A (mm)	B (mm)	C (in)	D (mm)	E (mm)
5	**25748**	44,5	22,4	3/4-14 NSPM	4,8	12,7
10	**25664**	41,4	36,6	1 1/4-11 1/2 NSPM	7,9	14,2
25	**25654**	57,2	54,1	2-11 1/2 NSPM	9,7	16

Piston Clevis

Cylinder Tons	Part No.	A (mm)	B (mm)	C (mm)	D (mm)	E (mm)	F (mm)
5**	**350095**	44,5	28,7	16	36,6	16	14,2
10 or 15**	**350094**	65	42,9	22,4	58,7	25,4	25,4
25**	**420059**	74,7	57,2	31,8	68,3	31,8	38,1

** Can be used with RD106, RD1010 Cylinder.

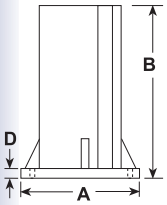

Support Base

Cylinder	Order	A (mm)	B (mm)	C (mm)
10	**420062**	177,8	127	11,2
25	**420063**	177,8	127	11,2

Threaded Adapter

Plain Adapter

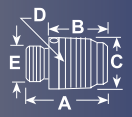

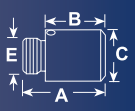

Cylinder Tons	Part No.	A (mm)	B (mm)	C (mm)	D (in)	E (in)
5	**202178** (threaded)	41,4	28,7	26,9	3/4-14 NPT	3/4-16UNF-2A
10 or 15	**202179** (threaded)	46,0	26,9	41,4	1 1/4-11 1/2-NPT	1-8UNC-2A
25	**202180** (threaded)	69,9	47,8	60,5	2-11 1/2-NPT	1 1/2-16UN-2A
10 or 15	**350724** (plain)	50,8	31,8	37,6	-	1-8UNC-2A
25	**350723** (plain)	54,1	31,8	57,2	-	1 1/2-16UN-2A

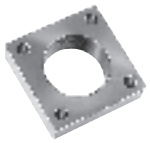

Cylinder Mounting Plate

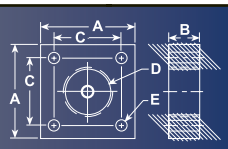

Cylinder Tons	Part No.	A (mm)	B (mm)	C (mm)	D (in)	E (mm)
5	**350099**	76,2	25,4	54,1	1 1/2-16UN-2B	8,6
10	**350100**	88,9	25,4	66,8	2 1/4-14UNS-2B	8,6
15	**350184**	88,9	25,4	66,8	2 3/4-16UN-2B	8,6
25	**420064**	127	50,8	93	3 5/16-12UN-2B	16,8

Extension Rod

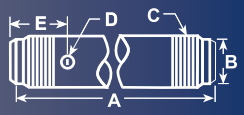

Cylinder Tons	Part No.	A (mm)	B (mm)	C (in)	D (mm)	E (mm)
5	**350895**	127	22,4	3/4-14 NPT	8,4	50,8
5	**38908**	254	22,4	3/4-14 NPT	8,4	50,8
5	**350896**	457,2	22,4	3/4-14 NPT	8,4	50,8
10	**350897**	127	36,6	1 1/4-11 1/2-NPT	8,4	50,8
10	**38909**	254	36,6	1 1/4-11 1/2-NPT	8,4	50,8
10	**350898**	457,2	36,6	1 1/4-11 1/2-NPT	8,4	50,8

Cylinder Base Attachment

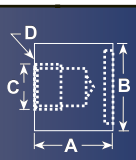

Cylinder Tons	Part No.	A (mm)	B (mm)	C (in)	D (mm/in)
5†	**208380**	41,4	44,5	3/4-14NPSM	7,1Dia.(No.2) 1/4-20 UNC x3/4" Lg.Socket Head Cap Srews
10†	**208381**	47,8	63,5	1 1/4-11 1/2-NPSM	8,6 Dia.(No.2) 5/16-18 UNC x1" Lg. Socket Head Cap Screws
25†	**208382**	60,5	98,6	2-11 1/2-NPSM	13,5 Dia. (No.2) 1/2-13 UNC x 1" Lg. Socket Head Cap Screws

Cylinder Flat Base

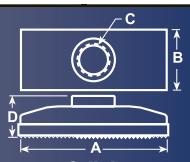

Cylinder Tons	Part No.	A (mm)	B (mm)	C (in)	D (mm)
5	**25750***	114,3	63,5	3/4-14-NPSM	34
10	**32325***	166,6	88,9	1 1/4-11 1/2-NPSM	36,6

Smooth Saddle **Serrated Saddle**

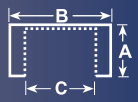

Cylinder Tons	Part No.	A (mm)	B (mm)	C (in)
5	**25746* (serrated)**	28,7	33,3	3/4-14NPSM
10 or 15	**31772* (serrated)**	28,7	50,8	1 1/4-11 1/2-NPSM
25	**31776* (serrated)**	33,3	76,2	2-11 1/2-NPSM
5	**351575* (plain)**	28,7	33,3	3/4-14-NPSM
10	**24016* (plain)**	28,7	50,8	1 1/4-11 1/2-NPSM
25	**351576* (plain)**	33,3	76,2	2-11 1/2-NPSM

Body Clevis†

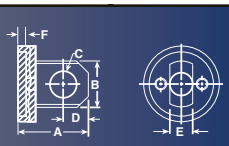

Cylinder Tons	Part No.	A (mm)	B (mm)	C (mm)	D (mm)	E (mm)	F (mm)
5	**350096**	52,3	28,7	16	16	14,2	6,4
10	**350097**	76,2	42,9	22,4	25,4	25,4	6,4
15	**350098**	77,7	42,9	22,4	25,4	25,4	6,4
25	**420061**	90,4	57,2	31,8	31,8	38,1	6,4

*** Items require threaded adapter (Page 36) when used with "C" series cylinders. They may be used on threaded "CBT" cylinders without the use of an adapter.**

† Mounting screws are included.

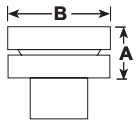

Swivel Cap

Cylinder Tons	Part No.	A (mm)	B (mm)
10 or 15	**350144**	22,4	30,1
25	**350145**	28,7	50,8
55 or 75	**350376**	31,8	71,4
100	**351574**	48,5	88,1

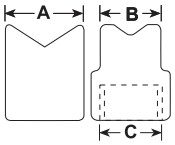

90° "V" Base

Cylinder Tons	Part No.	A (mm)	B (mm)	C (in)
5	**25388***	35,1	26,9	3/4-14-NPSM
10	**25395***	54,1	54,1	1 1/4-11 1/2-NPSM

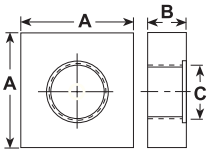

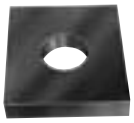

Plunger Base

Cylinder Tons	Part No.	A (mm)	B (mm)	C (in)
25	**25652**	152,4	31,8	2-11 1/2-NPSM

Accessories

Swivel Caps
Center Hole Accessories

CYLINDERS

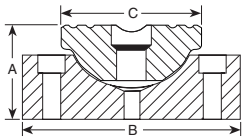

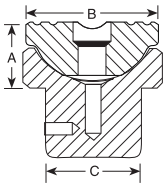

SWIVEL CAPS FOR "RSS",

Use with Cyl. No.	Swivel Cap Order No.	Weight (kg)	A (mm)	B (mm)	C (mm)
RSS101	**350320**	0,2	25,4	36,5	36,5
RSS202	**350321**	0,6	34,9	54	54
RSS302	**350322**	0,7	34,9	63,5	54
RSS502	**350331**	1,2	36,5	82,6	54
RSS1002	**350332**	3,0	46	111,1	85,7
Tonnage		**"RA" Cylinders**			
55	**350376**	0,9	31,8	71,4	71,4
100	**350984**	2,5	49,2	95,3	79,4

SWIVEL CAPS FOR "RD" CYLINDERS

Cylinder Tonnage	Swivel Cap Order No.	Weight (kg)	A (mm)	B (mm)	C (mm)
10	**350144**	0,4	22,2	36,5	21,8
25	**350145**	0,6	28,6	54	36,5
55	**351325**	1,9	61,9	63,5	39,3
100	**351324**	5,1	75,0	95,3	67,5
150	**351334**	5,8	66,7	111,1	77,8

SWIVEL CAPS

Reduce the effects of off center loading. Tilts up to 5 degrees. Radial grooves on top of cap reduce load slippage.

For use with "RC" cylinders

Use with Cyl. No.	Swivel Cap Order No.	Weight (kg)	A (mm)	B (mm)
150-200 ton	**420867**	4,0	38,1	130,2
280 ton	**420868**	6,1	44,5	149,2
355 ton	**420869**	16,8	69,9	195,3
435 ton	**420870**	23,6	79,4	225,4
565 ton	**420871**	35,4	92,1	250,8

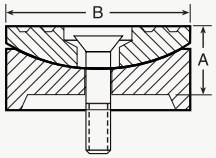

For use with "RL" cylinders

A (mm)	B (mm)	Use with Cyl. No.	Swivel Cap Order No.	Wt. (kg)
25,4	71,4	55-100 ton	**420866**	0,8
38,1	130,2	150-200 ton	**420867**	4,8
44,5	149,2	280 ton	**420868**	6,1
69,9	195,3	355 ton	**420869**	16,8
79,4	225,4	435 ton	**420870**	23,6
92,1	250,8	565 ton	**420871**	35,4

Reduce the effects of off center loading. Tilts up to 5 degrees. Radial grooves on top of cap reduce load slippage.
Notch across face of each cap helps keep loads having a protruding or round shaped centered.

"CENTER-HOLE" CYLINDER ACCESSORIES

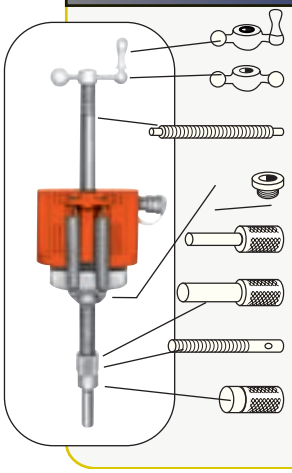

	To use with Cyl. No		RT172, RH203	RT302, RH302 RH303, RH306	RT503, RH503, RH603 RH605, RH606	RT1004
	Order Set No.		RHA20	RHA30	RHA50	RHA100
1	Speed Crank	1	**24814**	**27198**	**29595**	**303785**
2	Speed Nut	2	**302482** 1"-8	**302483** 1 ¼"-7	**33439** 1 ⅝"-5 _"	**34136** 2 ½"-8
3	Adjusting Screw	3	**32118** 1"–8 508 mm Lg.	**34758** 1 ¼"-7 x 609,6 mm Lg.	**32698** 1⅝"-5 ½"x 762 mm Lg.	**32699** 2 ½ "-8 x 869,9 mm Lg.
4	Threaded Insert	4	Order threaded insert for RH series cylinders with the accessory set.(See page 35) Threaded insert supplied with RT series cylinders.			
5	Pushing Adapter	5	**201923** 1"-8, 12,7 mm dia. shank	**34510** 1 ¼"-7 x 19,1mm dia. shank	**34755** 1 ⅝"-5 ½" x 25,4 mm dia. shank	-
6	Pushing Adapter	6	**201454** 1"-8, 19,5 mm dia. shank	**34511** 1 ¼"-7 x 25,4 mm dia. shank	**34756** 1 ⅝"-5 ½" x 31,7 mm dia. shank	-
7	Jack Screw	7	**24813** 1"-8 x 177,8 mm Lg.	**25931** 1 ¼"-7 x 228,6 mm Lg.	**32701** 1 ⅝"-5 ½" x 279,4 mm Lg.	**32702** 2 ½"-8 x 406,4 mm lg.
8	Screw Cap	8	**28228** 1"-8 x 38,1 mm dia.	**28229** 1 ¼"-7 x 44,4 mm dia	**28230** 1 ⅝"-5 ½" x 571,5 mm Lg.	-

POWER TEAM

Seal Kits

Cylinder Order No.	Seal Kit*	Viton Seal Kit
C51C	300404	300210
C53C	300404	300210
C55C	300404	300210
C57C	300404	300210
C59C	300404	300210
C101C	300116	300211
C102C	300116	300211
C104C	300116	300211
C106C	300116	300211
C108C	300116	300211
C1010C	300116	300211
C1012C	300116	300211
C1014C	300116	300211
C1016C	300116	300211
C151C	300453	300471
C152C	300453	300471
C154C	300453	300471
C156C	300453	300471
C158C	300453	300471
C1510C	300453	300471
C1512C	300453	300471
C1514C	300453	300471
C1516C	300453	300471
C251C	300147	300213
C252C	300147	300213
C254C	300147	300213
C256C	300147	300213
C258C	300147	300213
C2510C	300147	300213
C2512C	300147	300213
C2514C	300147	300213
C552C	300114	300215
C554C	300114	300215
C556C	300114	300215
C5510C	300114	300215
C5513C	300114	300215
C756C	300647	300846
C7513C	300647	300846
C1002C	300112	300216
C1006C	300112	300216
C10010C	300112	300216
C55CBT	300404	300210
C106CBT	300116	300211
C1010CBT	300116	300211
C256CBT	300147	300213
C2514CBT	300147	300213
R1502C	300676	—
R1506C	300676	—
R15010C	300676	—
R2002C	300677	—
R2006C	300677	—

Cylinder Order No.	Seal Kit*	Viton Seal Kit
R20010C	300677	—
R2802C	300678	—
R2806C	300678	—
R28010C	300678	—
R3552C	300679	—
R3556C	300679	—
R35510C	300679	—
R4302C	300680	—
R4306C	300680	—
R43010C	300680	—
R5652C	300681	—
R5656C	300681	—
R56510C	300681	—
R1002D	300928	—
R1006D	300928	—
R10010D	300928	—
R1502D	300929	—
R1506D	300929	—
R15010D	300929	—
R2002D	300930	—
R2006D	300930	—
R20010D	300930	—
R2802D	300931	—
R2806D	300931	—
R28010D	300931	—
R3552D	300932	—
R3556D	300932	—
R35510D	300932	—
R4302D	300933	—
R4306D	300933	—
R43010D	300933	—
R5652D	300934	—
R5656D	300934	—
R56510D	300934	—
R552L	300674	—
R556L	300674	—
R5510L	300674	—
R1002L	300675	—
R1006L	300675	—
R10010L	300675	—
R1502L	300676	—
R1506L	300676	—
R15010L	300676	—
R2002L	300677	—
R2006L	300677	—
R20010L	300677	—
R2802L	300678	—
R2806L	300678	—
R28010L	300678	—
R3552L	300679	—
R3556L	300679	—

Cylinder Order No.	Seal Kit*	Viton Seal Kit
R35510L	300679	—
R4302L	300680	—
R4306L	300680	—
R43010L	300680	—
R5652L	300681	—
R5656L	300681	—
R56510L	300681	—
RA202	300631	—
RA204	300631	—
RA206	300631	—
RA302	300632	—
RA304	300632	—
RA306	300632	—
RA552	300391	—
RA554	300391	—
RA556	300391	—
RA5510	300391	—
RA1002	300444	—
RA1006	300444	—
RA556L	300395	—
RA1006L	300396	—
RD106	300017	—
RD1010	300017	—
RD256	300118	—
RD2514	300118	—
RD556	300005	—
RD5513	300005	—
RD5518	300005	—
RD8013	300410	—
RD1006	300006	—
RD10013	300006	—
RD10020	300006	—
RD1506	300007	—
RD15013	300007	—
RD15018	300007	—
RD2006	300008	—
RD20013	300008	—
RD3006	300466	—
RD30013	300466	—
RD4006	300467	—
RD40013	300467	—
RD5006	300468	—
RD50013	300468	—
RH102	300071	300221
RH108	300071	300221
RH120	300657	—

Cylinder Order No.	Seal Kit*	Viton Seal Kit
RH121	300576	—
RH121T	300576	—
RH123	300576	—
RH202	300615	—
RH203	300069	300222
RH206	300615	—
RH302	300037	300223
RH306	300037	300223
RH503	300059	300225
RH603	300477	300476
RH606	300477	300476
RH1003	300485	300585
RH303	300077	300224
RH306D	300822	300224
RH3010	300625	—
RH605	300269	300226
RH6010	300626	—
RH1001	300927	—
RH1006	300295	300227
RH10010	300629	—
RH1505	300154	300228
RH1508	300583	—
RH2008	300582	—
RHA306	300867	300868
RHA604D	300269	300226
RLS50	300454	—
RLS100	300455	—
RLS200	300456	—
RLS300	300457	—
RLS500S	300458	—
RLS750S	300459	—
RLS1000S	300460	—
RLS1500S	300461	—
RP25	300628	—
RP55	300627	—
RSS101	300010	—
RSS202	300011	—
RSS302	300297	—
RSS502	300292	—
RSS1002	300293	—
RSS2503	—	—
RSS1002D	300578	—
RT172	300358	—
RT302	300359	—
RT503	300360	—
RT1004	300024	—

* Nitrile seals come standard on all cylinders.

Accessories

Cribbing Blocks

Convert Power Team "Shorty" cylinders to mechanical cribbing devices; more stable than timber or other awkward, makeshift methods. Ideal for lifting applications such as structure moving. Reduce cribbing time dramatically. In effect, increases the stroke of the cylinder; stacking pads act as cylinder extensions:

1. Extend cylinder and insert lower supporting ring.
2. Retract cylinder, insert a stacking pad.
3. Extend cylinder again; pad increases cylinder stroke.
4. Repeat process until all rings and pads are used.

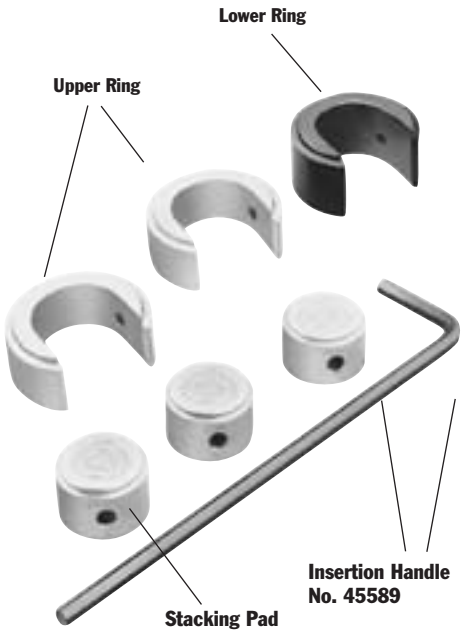

Each cribbing block set includes rings, pads and insertion handle.

No. CB30 — Cribbing block set for use with No. RSS302; 30 ton cylinder.
No. CB50 — Cribbing block set for use with No. RSS502; 50 ton cylinder.
No. CB100 — Cribbing block set for use with No. RSS1002; 100 ton cylinder.
No. 45589 — Insertion handle is used for inserting rings and pads.

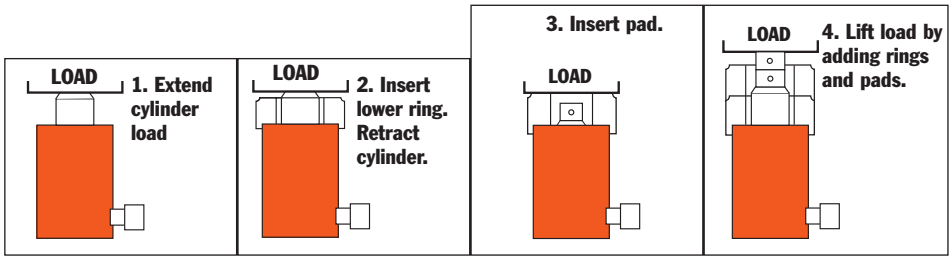

FOR USE WITH → / ORDER NUMBER →	30 TON CYLINDER NO. RSS302 / 30 TON SET NO. CB30			50 TON CYLINDER NO. RSS502 / 50 TON SET NO. CB50			100 TON CYLINDER NO. RSS1002 / 100 TON SET NO. CB100		
	Lower Ring	Upper Ring	Stacking Pad	Lower Ring	Upper Ring	Stacking Pad	Lower Ring	Upper Ring	Stacking Pad
No. included in set	1	2	3	1	2	3	1	2	3
Outside Diameter (mm)	114,3	114,3	69,9	139,7	139,7	85,7	187,7	187,7	120,7
Inside Diameter (mm)	71,4	71,4	—	87,7	87,7	—	122,2	122,2	
Height, each (mm)	57,9	45,6	45,2	56,4	43,7	42,8	54	44,5	43,7
Total stacked height of rings in Set (mm)	138,1			131,7			174,6		
Weight of Set (kg)	9,1			12,7			29		

Each set includes one Insertion Handle No. 45589 - ½" Hex. x 18" Long, 4" Bend

POWER TEAM

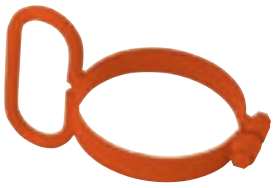

CYLINDER LIFTING HANDLE

No. 4206550R9	—	Lifting handle for "C" series, 25 ton cylinders.
No. 4213120R9	—	Lifting handle for RH302, RH303, RH306 and RH306D, cylinders.
No. 252215	—	Lifting handle RHA306, 30 ton cylinder.
No. 420496BK2	—	Lifting handle RA552 and RA554, 55 ton cylinders.
No. 420498BK2	—	Lifting handle RA1002, 100 ton cylinder.

ALUMINUM CYLINDER BASE

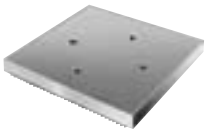

Aluminum Cylinder Base – For use when an enlarged cylinder base is needed or advantageous. Attaches to bottom of RA556, RA556L and RA5510 with four 3/8"–16 screws (included). Serrated base for extra stability.

No. 208406 – Aluminum cylinder base, 317 cm². For use with RA556, RA556L and RA5510 cylinders.

HEAD INSERTS FOR RH SERIES CYLINDERS

For Use With:	Threaded Insert Order No.
RH102, RH108	28632 3/4"–16
RH203	28612 1"–8
RH302, RH306	38904 1 1/4"–7
RH303	28644 1 1/4"–7
RH503	38855 1 5/8"–5 1/2
RH603, RH605 RH606	34251 1 5/8"–5 1/2

Quick-Change Inserts

"QUICK CHANGE" HEAD INSERTS FOR RT SERIES CYLINDERS

For Use With:	Threaded Order No.*	Plain Order No.
RT172	21669	21714
RT302	21873	21872
RT503	22274	22275
RT1004	24197	24196

Switch from a tapped hole to a plain hole quickly with these cylinder head inserts. They are held in place with a socket screw. Plain hole permits use of a speed nut for readjusting cylinder after extension.

*** Provided with cylinder**

PUMPS

HIGH PERFORMANCE PUMPS

Pump Selection
HIGH PERFORMANCE

Choosing the Right Pump

PUMPS

Step 1 – Select the hydraulic cylinder that best suits the application. See pages 6-8.

Step 2 – Select the series of hydraulic pump with adequate oil output and reservoir capacity to power cylinder. See page 47. Check speed/selection chart on page 6.

Step 3 – Select pump within series with the valve option that is best suited to the cylinder and application. See pages 48-49.

CONSIDERATIONS:

What maximum system operating pressure (bar) is required?

What volume of oil delivery is required? (For manual pumps, cm^3 of oil per handle stroke; for powered pumps, l./min. of oil).

Is a single- or 2-speed pump required? (2-speed pumps deliver high oil volume at low pressure for rapid cylinder piston advance, then shift to to the high pressure, low volume stage under load).

What is the preferred source of power?

a) Manual (hand or foot operated). Provides portability, can be used where electricity or shop air are not available.

b) Air/Hydraulic. Uses shop air or a portable air compressor.

c) Electric /Hydraulic. What voltage is available? Is a battery operated pump preferred?

d) Gasoline Engine/Hydraulic. Powers high-output pumps at remote job sites where air or electricity are unavailable.

Is portability of the pump a factor to consider?

Will the pump be used intermittently, or will it need to provide high-cycle operation? Does the application require that the pump be capable of starting under load?

Is fluid heat build-up a factor in your application? High cycle applications may require a larger capacity oil reservoir for cooling. Also, if you are using large displacement cylinders, the reservoir capacity must be sufficient to fully extend the piston of the cylinder.

Will the application require large displacement or multiple cylinders? Reservoir size and pump output levels will be factors to consider.

Does the working environment require a pump having a low operating noise (dBA) level?

Must the pump operate in a spark-free environment?

MANUALLY-OPERATED HYDRAULIC PUMPS:

P12, P23, P55 – These single-speed pumps are for use with single-acting cylinders. See page 58.

P19, P59, P59F, P157, P159, P300, P460 – These 2-speed pumps are used with single-acting cylinders. The 2-speed feature provides high oil volume for fast cylinder piston approach to the work; pump automatically shifts to the high pressure stage. This reduces the number of pump handle strokes required. See pages 59-60.

P157D, P159D, P300D, P460D – These 2-speed pumps are used with double-acting cylinders. See page 60.

AIR/HYDRAULIC PUMPS

Used where air is the preferred energy source or where electricity is not available. Ideal for use in petrochemical, mines or other inflammable or explosive environments.

PA6 Series – These single-speed pumps drive single- or double-acting cylinders. See pages 62-65.

PA9 Series – These new single-speed pumps drive single-acting cylinders and are ideal for powering portable hydraulic tools. See pages 66-67.

PA50 Series – These single-speed pumps drive single- or double-acting low pressure (225 bar) cylinders. See pages 70-71.

PA60 – This 2-speed pump is equipped with a manifold to operate multiple cylinders, and provides a 7,6 liter reservoir capacity. See pages 68-69.

PA64 – Similar to PA60, this 2-speed pump drives single- or double-acting cylinders. See pages 68-70.

PA172 and PA174 – These "economy" 2-speed pumps drive single- or double-acting cylinders, depending on the model chosen. Provide a low weight to output ratio. See pages 72-73.

PA462 and PA464 Series – These 2-speed pumps drive single or double-acting cylinders, depending on the model selected. They offer high speed cylinder piston advance. See pages 74-75.

PA554 – This 2-speed pump drives single- or double-acting cylinders, delivering a high volume of oil. See pages 72-74.

ELECTRIC/HYDRAULIC PUMPS

All of the following pumps are 2-speed models, and can be used to drive single- or double-acting cylinders.

"Quarter Horse" Series – As their name implies, these pumps feature a 0,18Kw ($^1/_4$ hp) electric motor. A battery-powered version is available. Having a low noise level and weighing just 9 kg, they are ideal for powering portable hydraulic spreaders, nut splitters, pipe flange spreaders and other tools. See pages 80-81.

PE17 Series – CSA rated for intermittent duty, these feature a 0,37Kw ($^1/_2$ hp), single phase induction motor with a low noise level (67-81 dBA). Smaller generators and low amperage circuits can be used as a power source. See pages 82-83.

PE46 Series – Powered by a 1,1Kw ($1^1/_2$ hp), single phase induction motor, operate at a moderate noise level of 77-81 dBA. CSA rated for intermittent duty. See pages 92-93.

PE18 Series – CSA rated for intermittent duty, these feature a 0,37Kw ($^1/_2$ hp), single phase universal motor with a noise level of 85-90 dBA. Provide high performance at a low price. Has low amperage draw. See pages 84-85.

PE30 Series – Equipped with a 0,75Kw (1 hp), single phase permanent magnet motor, have a noise level of only 82-87 dBA. CSA rated for intermittent duty, and require a relatively low voltage; ideal for use in general construction applications. Roll cage/handle protects the motor and controls. See pages 90-91.

PE55 and PED25 Series – The famous Vanguard® pumps have been continually upgraded for 40 years; some of the originals are still in service! Equipped with a 0,83Kw ($1^1/_8$ hp), single phase universal motor, have a high noise level (90-95 dBA). Offer the best weight to performance ratio of any Power Team electric/hydraulic pump. CSA rated for intermittent duty. The PED25 versions are "dual flow" pumps which deliver the same low and high pressures to both valves, and have a noise level of 80-85 dBA. They have a 1,1Kw ($1^1/_2$ hp) induction motor.

See pages 88-89, 94-95.

CYLINDER/PUMP MATCHING Page 6
CYLINDERS Page 12
PUMP/CYLINDER SETS Page 61
PUMP ACCESSORIES Page 116
HYDRAULIC ACCESSORIES Page 120

Pump Selection
HIGH PERFORMANCE

Choosing the Right Pump

PUMPS

PE60 Series – The Vanguard® Supreme® pumps provide trouble-free service in the most severe working environments. Powered by a 0,82Kw ($1^1/_8$ hp), single phase motor, has a moderate noise level of 80-85 dBA. Start well under load even at the reduced voltages encountered on construction sites. High-output pumps, ideal for use with post-tensioning/pre-stressing jacks and other high-pressure hydraulic tools. See pages 96-97.

"Custom-built" pumps – Power Team offers you "assemble to order" electric/hydraulic pumps to suit unique applications. You can choose from pre-engineered, off the-shelf components to customize your pump. See pages 112-115.

PE21 Series – Ideal for heavy-duty, extended-cycle applications. Powered by a 0,75Kw (1 hp), single phase motor, pump operates a very low noise level of 70 dBA. Pump automatically shuts down in the event of a power failure. CSA rated for intermittent duty. See pages 86-87. "Quiet" Pumps. Our PQ60 and PQ120 series operate at a very low noise level of between 73-78 dBA. The PQ60 has a 1,5Kw (2 hp) (single phase) motor; the PQ120 has a 2,2Kw (3 hp) (3-phase) motor. These pumps are designed for heavy-duty, extended cycle operations. CSA rated for intermittent duty. See page 86.

PE400 Series – High-flow units deliver a large volume of high pressure oil for heavy construction and maintenance operations employing high tonnage cylinders. The PE400 is powered by a 7,5Kw (10 hp), 3-phase motor. Low noise rating of 73-80 dBA. See pages 102-103.

GASOLINE-DRIVEN HYDRAULIC PUMPS

These two-speed pumps are ideal for use in remote applications, such as construction sites. May be used with single- or double-acting cylinders.

PG30 Series – Powered by a 2-cycle, 1,5Kw (2 hp) Tecumseh engine, these have an integral, protective "roll cage" and adequate reservoir capacity for cylinders up to 100 tons capacity or more. Readily portable; popular in the railroad, rescue and construction markets. See pages 106-107.

PG55 Series – With a 4-cycle, 3Kw (4 hp) Briggs & Stratton engine, this pump is based on our popular Vanguard® Series. It has a generous five gallon reservoir capacity. See pages 106-107.

PG120 Series – Powered by a 4-cycle, 4,1Kw (5.5 hp) Honda engine. Has a 19 liter reservoir; capable of handling multiple-cylinder lifting tasks. Ideal for the structure moving, pier setting, bridge lifting and concrete contracting industries. See pages 108-109.

PG4004 – Featuring a 4-cycle, 13,5Kw (18 hp) Briggs & Stratton engine, this unit has a big 76 liter reservoir. Rugged steel "roll cage" has a hook on top and swivel casters for ease of mobility. Popular for concrete stressing applications. See pages 108-109.

HYDRAULIC INTENSIFIER

HB Series – Turns low pressure hydraulic pumps into high pressure power sources to operate single-acting or double-acting cylinders and tools such as crimpers, spreaders, cutters, etc. Compact and portable for use inside a utility vehicle aerial bucket or stowing in a vehicle. See page 110.

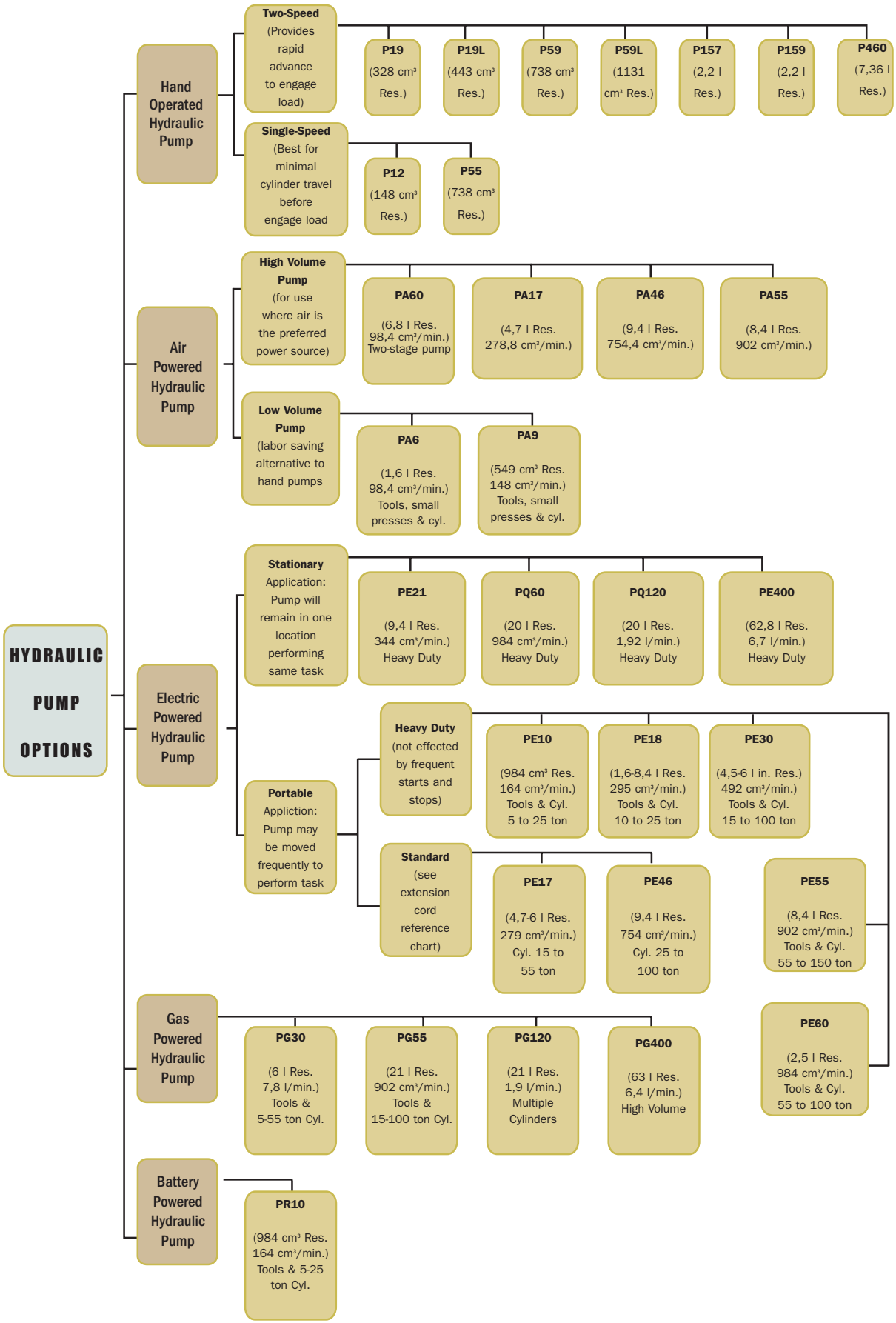
HYDRAULIC PUMP OPTIONS
Hand Operated Hydraulic Pump
Two-Speed (Provides rapid advance to engage load)
P19 (328 cm³ Res.)
P19L (443 cm³ Res.)
P59 (738 cm³ Res.)
P59L (1131 cm³ Res.)
P157 (2,2 l Res.)
P159 (2,2 l Res.)
P460 (7,36 l Res.)
Single-Speed (Best for minimal cylinder travel before engage load
P12 (148 cm³ Res.)
P55 (738 cm³ Res.)
Air Powered Hydraulic Pump
High Volume Pump (for use where air is the preferred power source)
PA60 (6,8 l Res. 98,4 cm³/min.) Two-stage pump
PA17 (4,7 l Res. 278,8 cm³/min.)
PA46 (9,4 l Res. 754,4 cm³/min.)
PA55 (8,4 l Res. 902 cm³/min.)
Low Volume Pump (labor saving alternative to hand pumps
PA6 (1,6 l Res. 98,4 cm³/min.) Tools, small presses & cyl.
PA9 (549 cm³ Res. 148 cm³/min.) Tools, small presses & cyl.
Electric Powered Hydraulic Pump
Stationary Application: Pump will remain in one location performing same task
PE21 (9,4 l Res. 344 cm³/min.) Heavy Duty
PQ60 (20 l Res. 984 cm³/min.) Heavy Duty
PQ120 (20 l Res. 1,92 l/min.) Heavy Duty
PE400 (62,8 l Res. 6,7 l/min.) Heavy Duty
Portable Appliction: Pump may be moved frequently to perform task
Heavy Duty (not effected by frequent starts and stops)
PE10 (984 cm³ Res. 164 cm³/min.) Tools & Cyl. 5 to 25 ton
PE18 (1,6-8,4 l Res. 295 cm³/min.) Tools & Cyl. 10 to 25 ton
PE30 (4,5-6 l in. Res.) 492 cm³/min.) Tools & Cyl. 15 to 100 ton
Standard (see extension cord reference chart)
PE17 (4,7-6 l Res. 279 cm³/min.) Cyl. 15 to 55 ton
PE46 (9,4 l Res. 754 cm³/min.) Cyl. 25 to 100 ton
PE55 (8,4 l Res. 902 cm³/min.) Tools & Cyl. 55 to 150 ton
PE60 (2,5 l Res. 984 cm³/min.) Tools & Cyl. 55 to 100 ton
Gas Powered Hydraulic Pump
PG30 (6 l Res. 7,8 l/min.) Tools & 5-55 ton Cyl.
PG55 (21 l Res. 902 cm³/min.) Tools & 15-100 ton Cyl.
PG120 (21 l Res. 1,9 l/min.) Multiple Cylinders
PG400 (63 l Res. 6,4 l/min.) High Volume
Battery Powered Hydraulic Pump
PR10 (984 cm³ Res. 164 cm³/min.) Tools & 5-25 ton Cyl.

Valve Selection

Choosing the Right Valve

Step 1 - Select the hydraulic cylinder that best suits the application. See pages 6-8.

Step 2 - Select the series of hydraulic pump with adequate oil output and reservoir capacity to power cylinder. See pages 44-47. Check speed chart on page 6.

Step 3 - Select pump within series with the valve option that is best matches cylinder, pump and application. See pages 50-57.

CONSIDERATIONS:

Will the valve be used with single- or double-acting cylinders?

Will the valve be mounted on the pump, away from the pump or directly into the hydraulic lines?

Will the valve be manually-operated or is remote control preferred?

Is independent control of multiple cylinders, or hydraulics tools preferred?

What directional control and pressure control valve functions are needed for the application?

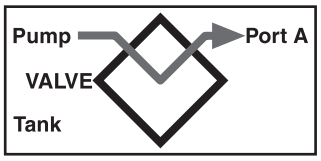

Basic types include manually operated, air or solenoid operated and pilot operated. Special application valves for pre-stressing and post-tensioning are also offered. Consult selection chart on page 50 for listings of all Power Team valves.

DIRECTIONAL CONTROL VALVES

Description	Position 1	Position 2	Center Position
2-way, 2-position (For control of single-acting cylinders)	 Oil goes from pump to cylinder; pressure is held from valve to cylinder when pump is shut off.	 Oil returns to reservoir, cylinder retracts.	
3-way, 2-position (For control of single-acting cylinders)	 Oil goes from pump to cylinder and holds when pump is shut off. Return line to reservoir is blocked.	 Cylinder retracts, oil returns to reservoir.	
3-way, 3-position (For control of single-acting cylinders)	 Oil goes from pump to cylinder and holds when pump is shut off. Return line to blocked.	 All oil is open to reservoir through return line.	 Cylinder pressure is held; pump can remain running and oil returns to reservoir.

IN-LINE HYDRAULIC VALVES

Load Lowering Valve – Provides precision metering for controlled return of the cylinder piston.

Sequence Valve – Used when a cylinder in a multiple cylinder application must advance before any other.

Pressure Reducing Valve – Permits independent pressure control to two or more clamping systems operated by a single power source.

Shut-off Valve – For fine metering of hydraulic oil. Several may be used to control multiple single-acting cylinders.

Check Valve – Permits flow of hydraulic oil in one direction only.

Pressure Relief Valve – Used at remote locations in a hydraulic circuit where maximum pressure requirements are less than the setting of the basic overload valve in the pump.

Metering Valve – Restricts surges by restricting flow to a certain level; when flow subsides, valve reopens automatically. For systems using large cylinders or extended lengths of hose.

Pressure Regulator Valve – Permits adjustment of operating pressures at various values below the relief valve setting of the pump.

Relief Valve – Protects a hydraulic system against over pressurization.

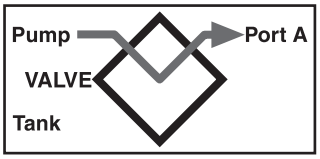

DIRECTIONAL CONTROL VALVES

Basic types include manually operated, air or solenoid operated and pilot operated. Special application valves for pre-stressing and post-tensioning are also offered. Consult selection chart on page 50 for listings of all Power Team valves.

3/4-way, 2 position (For control of single- or double-acting cylinders) 	Oil goes to the "extend" side of the cylinder. The oil from the "retract" side returns to reservoir. Cylinder holds with pump shut off.	 Oil goes to the "retract" side of the cylinder, oil from the "extend" side returns to reservoir.	
3/4-way, 3 position (For control of double-acting cylinders) 	Oil goes to the "extend" side of the cylinder, oil from the "retract" side returns to reservoir. Cylinder holds with pump shut off.	 Oil goes to the "retract" side of the cylinder, oil from the "extend" side returns to reservoir.	 Holds pressure even if pump is running. Oil from pump goes through valve, back to reservoir.
Other Valve Characteristics			
	**Tandem Center –** Cylinder ports are blocked, oil from pump goes to reservoir. Used when pump remains running Example: gasoline-driven pumps.	 **Closed Center –** Generally used when running multiple valves in series from one pump.	 **Open Center –** Used when holding is not a requirement, as when running two separate hydraulic tools such as cutters and crimpers.

Valves
SELECTION INFORMATION

Pump Mounted Valves

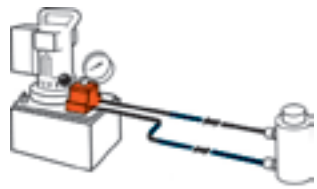

Order No.	Page No.	*Cylinder Application	Operation	PUMP MOUNTED VALVES Valve Type	Volt	Advance/ Return	Advance/ Hold Return	Posi-Check® Feature
9500	53	S.A & D.A.	Manual	4-way, 3 Pos. Tandem Center	—	no	yes	no
9501	53	S.A. & D.A.	Manual	4-way, 3 Pos. Closed Center	—	no	yes	no
9502	52	S.A.	Manual	3-way, 3 Pos. Closed Ctr.	—	no	yes	yes
9504	51	S.A. & D.A.	Manual	3/4-way, 2 Pos.	—	yes	yes	no
9506	53	D.A.	Manual	4-way, 3 Pos. Tandem Center	—	no	yes	yes
9507	53	D.A.	Manual	4-way, 3 Pos. Closed Center	—	no	yes	yes
9511	53	S.A. & D.A.	Manual	4-way, 3 Pos. Open Center	—	yes	yes	no
9512	56	D.A.	Solenoid	4-way, 3 Pos. Tandem Center	24	no	yes	yes
9513	56	D.A.	Solenoid	4-way, 3 Pos. Tandem Center	115	no	yes	yes
9516	56	D.A.	Solenoid	4-way, 3 Pos. Tandem Center	12DC	no	yes	yes
9517	51	S.A.	Manual	2-way, 2 Pos.	—	no	yes	no
9519	56	D.A.	Solenoid	4-way, 3 Pos. Tandem Center	230	no	yes	yes
9520	52	S.A.	Manual	4-way, 3 Pos. Tandem Center	—	no	yes	yes
9522	56	D.A.	Solenoid	4-way, 3 Pos. Open Center	230	yes	no	no
9523	56	S.A.	Pilot Operated Solenoid	3-way, 2 Pos.	230	yes	no	no
9552	55	S.A. & D.A.	Solenoid	3/4-way, 2 Pos.	230	yes	no	no
9553	56	S.A.	Pilot Operated Solenoid	3-way, 2 Pos.	24	yes	no	no
9569	56	S.A.	Solenoid	3-way, 2 Pos.	24	no	yes	no
9570	56	S.A.	Solenoid	3-way, 2 Pos.	230	no	yes	no
9572	56	S.A. & D.A.	Solenoid	3/4-way, 2 Pos.	24	yes	no	no
9576	52	S.A.	Manual	3-way, 3 Pos. Metering Tandem Ctr.	—	no	yes	no
9579	55	S.A.	Solenoid	3-way, 2 Pos.	115	no	yes	no
9582	51	S.A.	Manual	3-way, 2 Pos.	—	no	yes	no
9584	51	S.A.	Manual	3-way, 2 Pos.	—	no	yes	no
9589	56	S.A.	Pilot Operated Solenoid	3-way, 2 Pos.	115	yes	no	no
9590	56	D.A.	Solenoid	4-way, 3 Pos. Open Center	115	yes	no	no
9592	55	S.A. & D.A.	Solenoid	3/4-way, 2 Pos.	115	yes	no	no
9594	55	S.A. & D.A.	Air	3/4-way, 2 Pos.	—	no	yes	yes
9599	54	S.A.	Pilot Operated Solenoid	3-way, 3 Pos. Tandem Center	24	no	yes	yes
9605	54	S.A.	Pilot Operated Solenoid	3-way, 3 Pos. Tandem Center	115	no	yes	yes
9609	54	S.A.	Manual	3-way, 3 Pos. Tandem Center	—	no	yes	no
9610	51	S.A.	Auto Pilot Operated	3-way, 2 Pos.	—	yes	no	no
9610A	51	S.A.	Manual	2/3-way, 2 Pos.	—	no	yes	no
9615	56	D.A.	Solenoid	4-way, 3 Pos. Open Center	24	yes	no	no
9628	57	S.A. & D.A.	Manual	Post Tensioning	—	special	no	no
9632	57	S.A. & D.A.	Manual	Post Tensioning	—	special	no	no

* "S.A." represents single-acting cylinders, "D.A." represents double-acting cylinders

CYLINDER/PUMP MATCHING Page 6
CYLINDERS Page 12
PUMP/CYLINDER SETS Page 61
PUMP ACCESSORIES Page 116
HYDRAULIC ACCESSORIES Page 120

Manual and
Pilot Operated

700 bar, 3/8" ports, 19 l/min
max flow rate.

3-WAY/2-POSITION MANUAL VALVES

Applications – Single-acting cylinders.
Actuation – Lever operated.
Functions – Cylinder piston "advance", "hold" and "return".
Used on these pumps – P460, PE17, PE21, PE30, PE46, PE55, PE84, PE90, and PE120 series.
No. 9582 – 3-way/2-position manual valve. Wt. 1,13 kg.
No. 9584 – Same as 9582, but has "flipper" control. Wt., 0,8 kg.

3-WAY/2-POSITION, PILOT OPERATED AUTOMATIC VALVE

Application – Single-acting cylinders. Actuation: Pilot oil.
Functions – When pump is started, pilot oil automatically closes valve and directs oil to cylinder; when pump is stopped, valve automatically opens and oil returns to reservoir.
Used on these pumps – Furnished with pilot lines and adapters for PA55, PA90, PE30, PE55, PE90 and PE120 series.
No. 9610 – 3-way/2-position pilot operated automatic valve. Wt., 1,9 kg.

2/3-WAY/2-POSITION MANUAL/PILOT OPERATED AUTOMATIC VALVE

Application – Manual operation for load lifting and holding with single-acting cylinders; automatic "dump" for operating hydraulic tools.
Actuation – Flipper lever/pilot oil.
Functions – With lever in closed position, valve will hold the load. When lever is "open", valve functions as a true automatic "dump" valve.
Used on these pumps – Furnished with pilot lines and adapters for PA55, PA90, PE30, PE55, PE90 and PE120 series. For application on other pumps, consult factory.
No. 9610A – 2/3-way/2-position manual/pilot operated automatic valve. Wt., 2 kg.

2-WAY/2-POSITION MANUAL VALVE

Application – Single-acting cylinders.
Actuation – Flipper lever operated.
Functions – Cylinder piston "advance", "hold" and "retract".
Used on these pumps – PE172, PA172 and PE84 series.
No. 9517 – 2-way/2-position manual valve. Wt., 1,45 kg.

3/4-WAY/2-POSITION MANUAL VALVE

Application – Single- or double-acting cylinders.
Actuation – Lever operated, detent positioned.
Functions – Pos. 1 – Oil is directed to "advance" side of cylinder, oil from "retract" side goes to reservoir; cylinder "holds" with pump shut off. Pos. 2 – Oil goes to "retract" side of cylinder; cylinder "holds" with pump shut off. When using as a 3-way valve for single-acting cylinders, port "A" or "B" is plugged. See note on page 52 regarding plugging of ports and resulting heat build-up.
Used on these pumps – P460, PA6D, PA17, PA46, PA55, PA60, PE17, PE21, PE30, PE46, PE55, PE84, PE90, PE120, PE200, PE400, PQ60 and PQ120 series.
No. 9504 – 3/4-way/2-position manual valve. Wt., 1,9 kg.
NOTE: 9504 can be remote mounted with a 9510 subplate (see page 107).

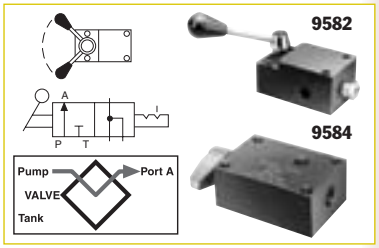

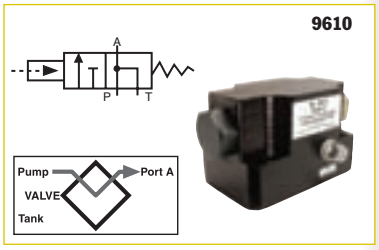

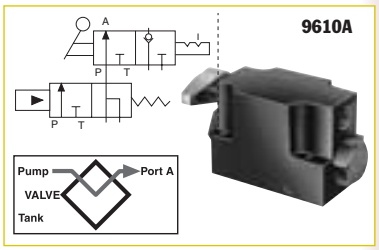

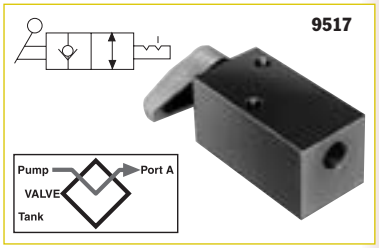

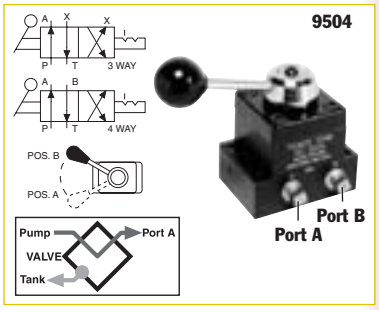

NOTE: A pressure switch and/or gauge may be attached to any valve on this page. (refer to pages 117, 124-125)
⚠CAUTION: To prevent sudden, uncontrolled descent of a load as it is being lowered, use a No. 9596 Load Lowering Valve or No. 9720 Counter Balance Valve (see page 132) in conjunction with the directional valve used in your application.
IMPORTANT: Conversion kit 251528 must be used when mounting any of the valves on this page on PA17 or PE17 pumps.
IMPORTANT: When ordering any valve for a PE30 or PG30 series pump, 1/2" longer mounting screws are required. For valves 9504, 9584, 9610 and 9610A, order four 12001 cap screws. For valve 9582, order two 12001 and two 10856 cap screws.

Valves
HYDRAULIC PUMP MOUNTED

3 Way/3 Position
Manual

700 bar, 3/8" ports, 19 l/min
max flow rate.

PUMPS/VALVES

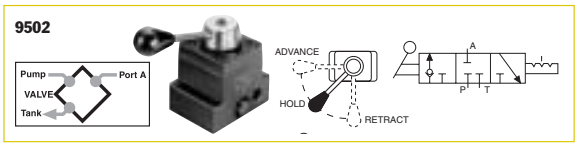

3-WAY/3-POSITION (CLOSED CENTER) NON-INTERFLOW MANUAL VALVE WITH "POSI-CHECK®"

Application – Single-acting cylinders.
Actuation – Lever operated, detent positioned.
Functions – Pos. 1 – Oil is directed from pump to cylinder and "holds" with pump shut off; line to reservoir is blocked. Pos. 2 – All oil is open to reservoir through tank line.
Center pos. – Cylinder pressure is held; pump should be shut off.
Used on these pumps – P460, PA17, PA46, PA55, PA60, PE17, PE21, PE30, PE46, PE55, PE84, PE90, PE120, PE200, PE400, PQ60 and PQ120 series.
NOTE: A pressure switch and/or gauge may be attached if desired (see pages 124-125, 117). Also, the 9502 can be remote mounted if a 9510 subplate is used (see page 117).
No. 9502 – 3-way/3-position (closed center) manual valve. Wt., 1,9 kg.

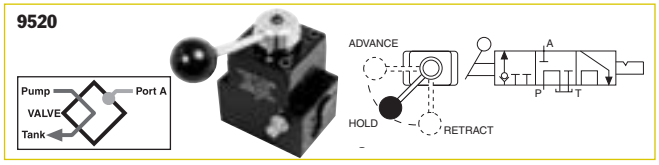

3-WAY/3-POSITION (TANDEM CENTER) MANUAL VALVE WITH "POSI-CHECK®"

Application – Single-acting cylinders.
Actuation – Lever operated, detent positioned.
Functions – "Advance" "hold" and "return". When shifted to "return" position, pump and cylinder return oil through their own separate return lines, allowing faster retraction of piston. The "Posi-Check®" feature guards against pressure loss when shifting from "advance" to "hold" position.
Used on these pumps – P460, PA17, PA46, PA55, PE17, PE21, PE30, PE46, PE55, PE84, PE90, PE120, PQ60, PQ120, PE200, PE400, PG30, PG55, PG120 and PG400 series.
No. 9520 – 3-way/3-position (tandem center) manual valve. Wt., 2,3 kg.

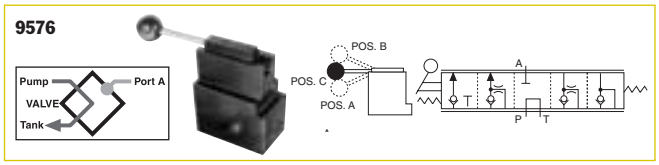

3-WAY/3-POSITION (TANDEM CENTER) METERING VALVE

Application – Single-acting cylinders.
Actuation – Lever operated.
Functions – Cylinder piston metered "advance", "hold" and metered "return".
Used on these pumps – PA17, PA46, PA55, PE17, PE21, PE30, PE46, PE55, PE84, PE90, PE120, PQ60, PQ120, PE200, PE400, PG30, PG55, PG120 and PG400 series.
NOTE: A pressure switch and/or gauge may be attached if desired see pages 124-125, 117). Also, the 9576 can be remote mounted with a 9510 subplate (see page 117).
No. 9576 – 3-way/3-position (tandem center) metering valve. Wt., 3,9 kg.

⚠ **CAUTION:** To prevent sudden, uncontrolled descent of a load as it is being lowered, use a No. 9596 Load Lowering Valve or No. 9720 Counter Balance Valve (see page 132) in conjunction with the directional valve used in your application.
NOTE: Valves 9501, 9502, 9504 and 9507 can have a port blocked or have a closed center position. When a port is blocked and the valve is shifted to the blocked port, the pump will generate excessive heat. An electric or rotary air pump can either be turned off manually or with a pressure switch. Reciprocating air pumps may be adjusted to stall out and stop.
NOTE: Gauge ports monitor pump pressure only, not pressure to the hydraulic cylinder(s).
IMPORTANT: Conversion kit 251528 must be used when mounting any of the valves on this page on PA17 or PE17 pumps.
IMPORTANT: When ordering any valve for a PE30 or PG30 series pump, 1/2" longer mounting screws are required. For valves 9502 and 9520, order four 12001 cap screws. For valve 9576, order four 17428 cap screws.

4 Way/3 Position
Manual

700 bar, 3/8" ports, 19 l/min max flow rate.

4-WAY/3-POSITION (TANDEM CENTER) VALVE WITH "POSI-CHECK®"

Application – Double-acting cylinders.
Actuation – Lever operated, detent positioned.
Functions – "Advance", "hold" and "return". The "Posi-Check®" feature guards against pressure loss when shifting from "advance" to "hold" position.
Used on these pumps – P460, PA6D, PA17, PA46, PA55, PE17, PE21, PE30, PE46, PE55, PE84, PE90, PE120, PE200, PE400, PED, PG30, PG55, PG120, PG400, PQ60 and PQ120 series
No. 9506 – 4-way/3-position (tandem center) manual valve. Wt., 2,3 kg.

4-WAY/3-POSITION (TANDEM CENTER) AND (OPEN-CENTER) MANUAL VALVES

Application – Single- or double-acting cylinders.
Actuation – Lever operated, detent positioned.
Functions – The 9500 provides "advance", "hold" and "return". The 9511 (open center) valve can be used if holding is not a requirement, as when running two separate hydraulic tools. Provides "advance" and "return" only.
Used on these pumps – P460, PA17, PA46, PA55, PE17*, PE21, PE30, PE46, PE55, PE84, PE90, PE120, PE200, PE400, PG30, PG55, PG120, PG400, PQ60 and PQ120 series. *Does not mount without 251528
No. 9500 – 4-way/3-position (tandem center) manual valve. Wt., 1,9 kg.
No. 9511 – Same as 9500, except has an open center.

4-WAY/3-POSITION (CLOSED CENTER) MANUAL VALVE WITH "POSI-CHECK®"

Application – Single- or double-acting cylinders.
Actuation – Lever operated, detent positioned.
Functions – Similar to 9506, but is a closed center valve with "Posi-Check®". Generally used to operate multiple cylinders with a single pump. Provides "advance", "hold" and "return". The "Posi-Check®" feature guards against pressure loss when shifting from the "advance" to "hold" position. See note on page 46 regarding plugging of ports and resulting heat build-up.
Used on these pumps – P460, PA17, PA46, PA55, PA60, PA6D, PE17, PE21, PE30, PE46, PE55, PE84, PE90, PE120, PE200, PE400, PQ60 and PQ120 series.
No. 9507 – 4-way/3-position (closed center) manual valve. Wt., 2,3 kg.

4-WAY/3-POSITION (CLOSED CENTER) MANUAL VALVE

Application – Single- or double-acting cylinders.
Actuation – Lever operated, detent positioned.
Functions – "Advance", "hold" and "return". Closed center design makes valve suitable for operating multiple cylinders from a single pump. See note on page 52 regarding plugging of ports and resulting heat build-up.
Used on these pumps – P460, PA17, PA46, PA55, PA60, PE17, PE21, PE30, PE46, PE55, PE84, PE90, PE120, PE200, PE400, PQ60 and P120 series.
No. 9501 – 4-way/3-position (closed center) valve. Wt., 1,9 kg.

NOTE: A pressure switch and/or gauge may be attached to valves 9500, 9501, 9506, 9511 if desired (see pages 124-125, 117). Also, all valves on this page may be remote mounted with a 9510 subplate (see page 117).

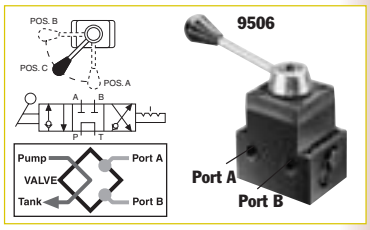

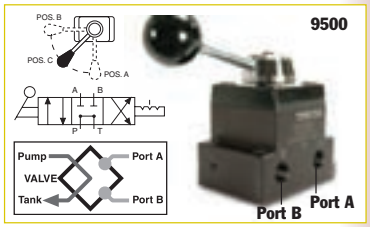

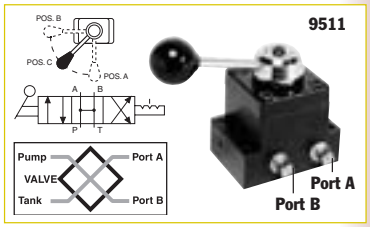

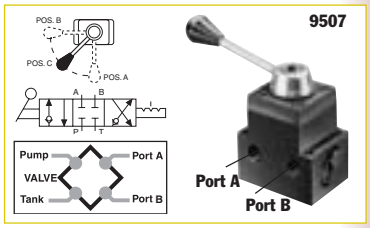

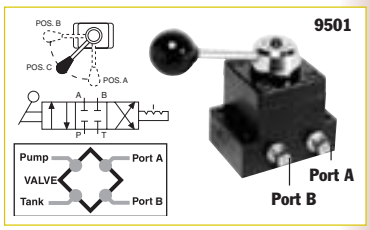

CYLINDER/PUMP MATCHING Page 6
CYLINDERS Page 12
PUMP/CYLINDER SETS Page 61
PUMP ACCESSORIES Page 116
HYDRAULIC ACCESSORIES Page 120

Valves
HYDRAULIC PUMP MOUNTED

Manual and
Pilot Operated

700 bar, 3/8" ports, 19 l/min
max flow rate.

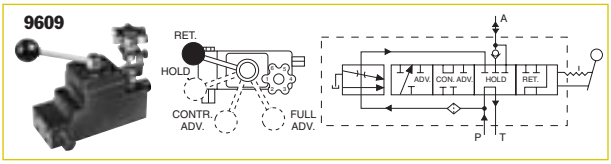

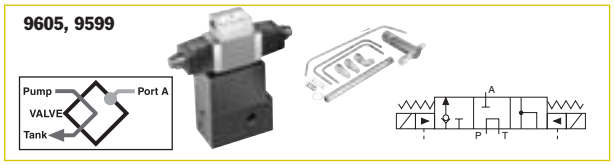

3-WAY/3-POSITION (TANDEM CENTER) SOLENOID VALVES WITH "POSI-CHECK®"

Application – Single-acting cylinders.
Actuation – Solenoid operated: 9605 is 115 volt, 50/60 Hz; 9599 is 24 volt, 50 Hz.
Functions – "Advance", "hold" and "return" positions. When in "advance", solenoid "B" is energized and oil goes from pump to cylinder through pressure port. In "return" position, solenoid "A" is energized and oil is directed from cylinder and pump to reservoir. With both solenoids de-energized, in "hold" position, oil from pump is directed back to reservoir while oil is checked in cylinder. The "Posi-Check®" feature holds load when shifting from "advance" to "hold" position.
Used on these pumps – Furnished with pilot lines and adapters for PE55, PE30 (carrying handles must be removed) and PE120 series. For application on other models, consult factory.
No. 9605 – 3-way/3-position (tandem center) solenoid valve, 115 volt, 50 Hz. Wt., 6,4 kg.
No. 9599 – Same as 9605 except for 24 volt, 50 Hz circuits.
NOTE: Valves above are shipped without controls. Use 202777 remote hand control (see page 116). Consult factory for field installation.

3-WAY/4-POSITION MANUAL PRESSURE COMPENSATED VALVE

Application – Single-acting cylinders. Primarily for use in testing soil, rock, concrete, asphalt and related engineering materials.
Actuation – Lever and adjustable, pressure compensated flow control valve.
Functions – Cylinder piston "return", "hold", "controlled advance" (pressure compensated) and "advance" (full flow). Will deliver a relatively constant flow regardless of pressure between 70 and 700 bar.
Used on these pumps – PA17, PA46, PA55, PE17, PE21, PE30*, PE46, PE55, PE90, PE200, PE400, PG30*, PG55, PG120, PG400, PQ60 and PQ120 series.
* **NOTE:** Adapter kit 252161 is required for mounting this valve to a PE30 or PG30 series pump.
NOTE: This valve can be remote mounted with a 9510 subplate (see page 117).
No. 9609 – 3-way/4-position manual pressure compensated valve. Wt., 4 kg.

⚠ **CAUTION:** To prevent sudden, uncontrolled descent of a load as it is being lowered, use a No. 9596 Load Lowering Valve or No. 9720 Counter Balance Valve (see page 132) in conjunction with the directional valve used in your application.

IMPORTANT: Conversion kit 251528 must be used when mounting the 9609 valve on PA17 or PE17 pumps.

IMPORTANT: When ordering any valve for a PE30 or PG30 series pump, 1/2" longer mounting screws are required. For valves 9500, 9501 and 9511, order four 12001 cap screws. For valve 9552, 9506, and 9507, order four 11956 cap screws. For valves 9599 and 9605, order four 251078 cap screws. For valve 9609, order four 10855 cap screws.

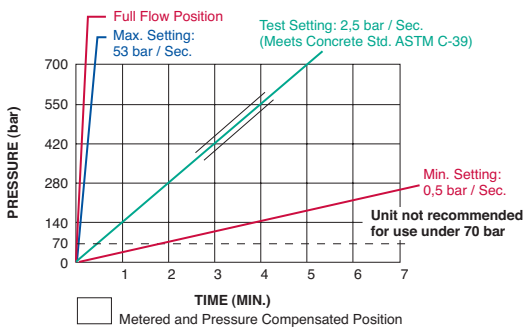

FLOW

Full flow position - 19 l (Ref.)
Metered advance position
1 l/min. (Max.)

PRESSURE

Min. working pressure - 70 bar.
Max. working pressure- -700 bar.
Max. valve case pressure - 35 bar.

POWER TEAM®

Valves
HYDRAULIC PUMP MOUNTED

Solenoid or
Air Operated

700 bar, 3/8" ports, 19 l/min
max flow rate.

PUMPS/VALVES

3-WAY/2-POSITION SOLENOID VALVE

Application – Single-acting cylinders.
Actuation – Solenoid operated, 115 volt, 50 Hz.
Functions – Cylinder piston advances when solenoid is de-energized and pump is running. When solenoid is energized, oil is directed to reservoir, and piston returns. For "hold" position, pump is stopped with solenoid de-energized.
Used on these pumps – PE17, PE21, PE30, PE46, PE55, PE84, PE90, PE120, PE200, PE400, PQ60 and PQ120 series.
No. 9579 – 3-way/2-position solenoid valve, 115 volt, 50 Hz. Wt., 4,4 kg.
No. 9569 – Same as 9579, except with 24 volt, 50 Hz solenoid.
No. 9570 – Same as 9579 except with 230 volt, 50 Hz solenoid.
NOTES: Valves above are shipped without control switch. Use 202777 remote hand switch (see page 116). When this valve is mounted, the pump must be equipped with an outlet check valve.

3/4-WAY/2-POSITION SOLENOID VALVES

Application – Single- or double-acting cylinders. When used with single-acting cylinders, one port should be plugged.
Actuation – Solenoid operated.
Functions – Oil is directed to "extend" side of cylinder, oil from "retract" side goes to reservoir; cylinder "holds" with pump shut off. Oil is directed to "retract" side of cylinder; oil from "extend" side goes to reservoir.
NOTE: Cylinder will not "hold" in the "return" position with motor running or shut off.
Used on these pumps – 9552, 9572 and 9592 are used with PE17, PE30 (with carrying handles removed), PE46, PE55, PE84, PE90, PE200, PE400, PQ60 and PQ120 series.
No. 9592 – 3/4-way/2-position solenoid valve, 115 volt, 50 Hz. Wt., 6,6 kg.
No. 9552 – Same as 9592, except with 230 volt, 50 Hz solenoid.
No. 9572 – Same as 9592, except with 24 volt, 50 Hz solenoid.
NOTE: Valves above are shipped without controls. The 9552, 9572 and 9592 can be used with the 304718 remote hand control. (see page 116)

Note: Ports are 1/4" NPTF.

AIR ACTUATED VALVE

Application – Single- or double-acting cylinders. When used with single-acting cylinders, one port should be plugged.
Actuation – Air operated.
Functions – Oil is directed to "extend" side of cylinder, oil from "retract" side goes to reservoir; cylinder "holds" with pump shut off. Oil is directed to "retract" side of cylinder; oil from "extend" side goes to reservoir.
NOTE: Cylinder will not "hold" in the "return" position with motor running or shut off.
Used on these pumps – PA17, PA46 and PA55 series.
No. 9594 – 3/4-way/2-position solenoid valve, air operated (minimum of 4 bar air pressure required). Wt., 5 kg.
NOTES: Valve above is shipped without controls. 9594 can be used with the 209593 remote hand control (see page 116). See page 132 for remote mounted models of this valve.

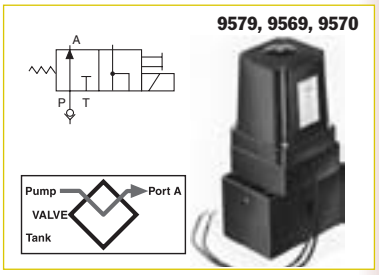

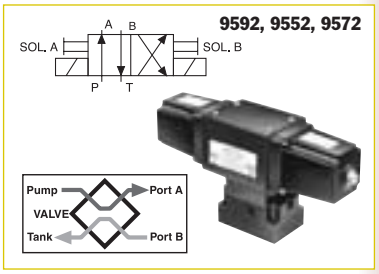

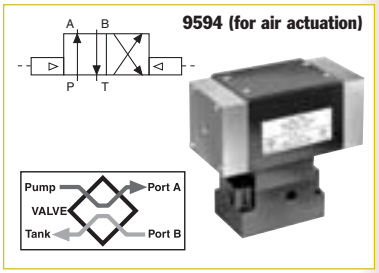

⚠ **CAUTION:** To prevent sudden, uncontrolled descent of a load as it is being lowered, use a No. 9596 Load Lowering Valve or No. 9720 Counter Balance Valve (see page 132) in conjunction with the directional valve used in your application.
IMPORTANT: Conversion kit 251528 must be used when mounting any of the valves on this page on PA17 or PE17 pumps.
IMPORTANT: When ordering any valve for a PE30 or PG30 series pump, 1/2" longer mounting screws are required. For valves 9569, 9570 and 9579, order four 10856 cap screws. For valves 9552, 9572 and 9592, order four 12001 cap screws.

Valves
HYDRAULIC PUMP MOUNTED

Solenoid or Air Operated

700 bar, 3/8" ports, 19 l/min max flow rate.

PUMPS/VALVES

9590, 9522, 9615

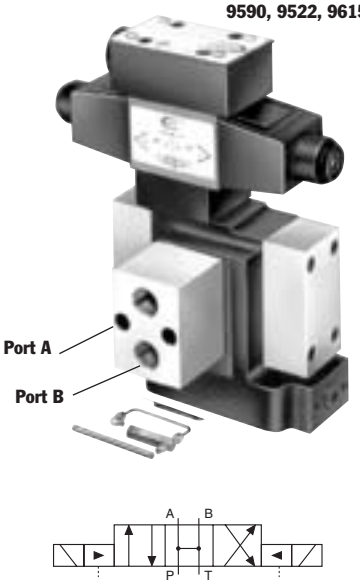

4-WAY/3-POSITION (OPEN CENTER) SOLENOID VALVE

Application – Double-acting cylinders.
Actuation – Solenoid operated, 115 volt, 50 Hz.
Functions – "Advance", open center and "return" positions. Cylinder ports and pump port are open to reservoir in "neutral".
Used on these pumps – Furnished with pilot lines and adapters for PE30 (with carrying handles removed), PE55, PE90 and PE120 series. For other pump models, consult factory.
NOTE: A pressure switch and/or gauge may be attached if desired (see pages 117, 124-125).
No. 9590 – 4-way/3-position (open center) solenoid valve, 115 volt, 50 Hz. Wt., 7 kg.
No. 9522 – Same as 9590 except for 230 volt, 50 Hz.
No. 9615 – Same as 9590 except for 24 volt, 50 Hz.

9513, 9512, 9516, 9519

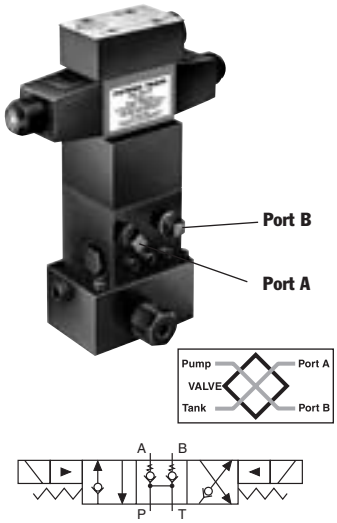

4-WAY/3-POSITION (TANDEM CENTER) PILOT OPERATED SOLENOID VALVE

Application – Double-acting cylinders.
Actuation – Solenoid operated, 115 volt, 50 Hz.
Functions – "Advance", "hold" and "return". The "Posi-Check®" feature holds the load when shifting from the "advance" to the "hold" position.
Used on these pumps – PE17, PE21, PE30 (with carrying handles removed), PE46, PE55, PE84, PE90, PE120, PE200, PE400, PQ60 and PQ120 series. **NOTE:** A gauge may be attached if desired (see pages 124-125).
No. 9513 – 4-way/3-position (tandem center) solenoid valve, 115 volt, 50Hz. Wt., 8,2 kg.
No. 9512 – Same as 9513 except for 24 volt, 50 Hz circuits.
No. 9516 – Same as 9513 except for 12 volt DC. For use on the PG1204S and PG400 series pumps only.
No. 9519 – Same as 9513 except for 230 volt, 50 Hz circuits. Consult factory for field installation.

9589, 9523, 9553

3-WAY/2-POSITION (PILOT OPERATED) SOLENOID VALVE

Application: Single-acting cylinders.
Actuation: Solenoid operated, 115 volt, 50 Hz.
Function: "Advance" and "return".
Used on these pumps: Furnished with pilot lines and adapters for PE30 (with carrying handles removed), PE55, PE90 and PE120 series. For other pump models, consult factory. **NOTE:** A pressure switch and/or gauge may be attached if desired (see pages 117, 124-125).
No. 9589 – 3-way/2-position (pilot operated) solenoid valve, 115 volt, 50Hz. Wt., 3,7 kg.
No. 9523 – Same as 9589 except for 230 volt, 50 Hz.
No. 9553 – Same as 9589 except for 24 volt, 50 Hz.

NOTE: Valves above are shipped without control switch. Use 202777 remote hand switch (see page 116).

⚠ **CAUTION:** To prevent sudden, uncontrolled descent of a load as it is being lowered, use a No. 9596 Load Lowering Valve or No. 9720 Counter Balance Valve (see page 132) in conjunction with the directional valve used in your application.

IMPORTANT: Conversion kit 251528 must be used when mounting the 9609 valve on PA17 or PE17 pumps.

IMPORTANT: When ordering any valve for a PE30 or PG30 series pump, 1/2" longer mounting screws are required. For valves 9513 and 9519, order four 11956 cap screws. For valves 9523, 9553 and 9589, order four 10855 cap screws. For valves 9522, 9590 and 9615, order four 10854 cap screws.

700 bar, 3/8" ports, 19 l/min max flow rate.

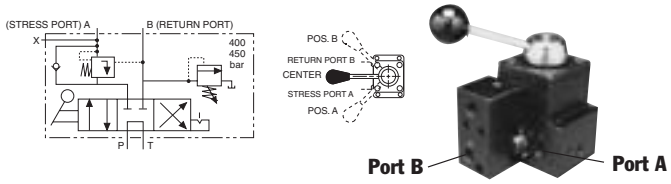

9628

Designed for use with Power Team air, gasoline and electric powered hydraulic pumps.

4-WAY/3-POSITION (TANDEM CENTER) MANUAL VALVE

Application – Single strand, double-acting stressing jacks with Power Wedge seater.
Actuation – Lever operated, detent positioned.
Operation –

1. With valve in center position, pump is started.
2. Cable is inserted into stressing tool, valve is placed in "A" position. "Pull" portion of stressing tool is pressurized to specified level for proper cable tensioning ("A" port is checked internally, can only be released by building pressure in "B" position).
3. Valve is placed in "B" position, which is pressure controlled and will not exceed 440 bar. "Return" portion of stressing tool is pressurized and will release "A" port when pressure reaches approximately one-half the "A" port pressure. "A" port remains open as long as this pressure differential is maintained.
4. Pump is stopped, valve is placed in "A" position, releasing "B" port pressure.

Used on these pumps: PA17*, PA46*, PA55, PE17*, PE21*, PE30, PE46*, PE55, PE60, PE84, PE120, PE200, PE400, PG30*, PG55, PG120, PG400, PQ60 and PQ120 series.

* These pumps may have reduced first flow stage characteristics due to internal valve restrictions.

No. 9628 – Post tensioning valve for 700 bar (max.) single-acting/Power Wedge seater.
Wt., 2,5 kg.

"TWIN" 4-WAY/3-POSITION (TANDEM CENTER) MANUAL VALVE

Application – Multi-strand, double-acting stressing jacks with an auxiliary seating cylinder.
Actuation – Dual lever operated, detent positioned.
Operation –

1. With valves "A" and "B" in center position, pump is started; cable is inserted into stressing tool.
2. Valve "A" is placed in "Stress" position; cylinder extends to tension cable. Pump pressure controls force exerted by tensioning cylinder in this position. "Stress" port is checked internally, and can only be released by building pressure in the valve "B" return position.
3. When desired cable tension is achieved, valve "A" is placed in valve "B" position and valve "B" in "Seat" position. Seating portion of cylinder will be pressurized to seating pressure controlled by "Seat" relief valve (factory set to 275 bar).
4. Valve "B" is shifted to "Return" position, which is pressure controlled and will not exceed 155 bar. "Return" portion of stressing tool should be pressurized and will release "Stress" port when pressure reaches 15% of "Stress" port pressure.
5. "Stress" port will remain open and cylinder will return as long as pressure differential is maintained. "Stress" and "Seat" ports are open to reservoir.
6. When cylinder has fully returned, both valves are shifted to "Center" position and oil will be directed to reservoir. Maximum pressure setting for the "Seat" relief valve is 420 bar.

Used on these pumps: PA17*, PA46*, PA55, PE17*, PE21*, PE30, PE46*, PE55, PE84, PE120, PE200, PE400, PG30*, PG55, PG120, PG400, PQ60 and PQ120 series.*

* These pumps may have reduced first flow stage characteristics due to internal valve restrictions.

No. 9632 – Post tensioning valve for 700 bar (max.) double-acting systems.
Wt., 6,2 kg.

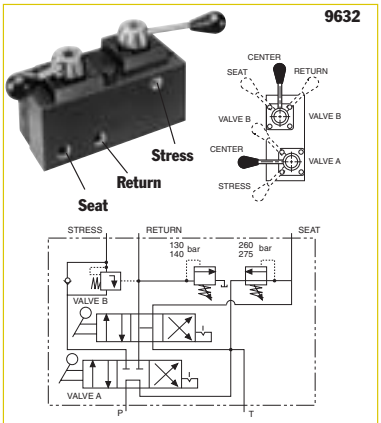

Pump mounted, 6-position detented 5-way manual dual valve. Rated pressure to valve "A" is 700 bar and valve "B" is 420 bar. Case pressure is 35 bar max.

⚠ **CAUTION:** To prevent sudden, uncontrolled descent of a load as it is being lowered, use a No. 9596 Load Lowering Valve or No. 9720 Counter Balance Valve (see page 132) in conjunction with the directional valve used in your application.
IMPORTANT: Conversion kit 251528 must be used when mounting any of the valves on this page on PA17 or PE17 pumps.
IMPORTANT: When ordering any valve for a PE30 or PG30 series pump, 1/2" longer mounting screws are required. For valves 9569, 9570 and 9579, order four 10856 cap screws. For valves 9552, 9572 and 9592, order four 12001 cap screws.

Hand Pump
HYDRAULIC P SERIES

197 to 738 cm³ reservoir
Single-Speed
Single-Acting

Best suited for applications where there is little or no free travel.

PUMPS

- All metal construction, won't burn through in welding environments.
- Formed metal handle provides less flex, and reduces operator fatigue.
- Convenient fill port on P23 and P55 allows pumps to be filled in a horizontal or vertical position.
- Fill cap seal acts as safety valve preventing over-pressurizing of reservoir.
- Relief valve inboard of check valve prevents loads from drifting down.
- Large valve knob gives added control for slowly metering loads down.

P12

P23

700 bar

P55

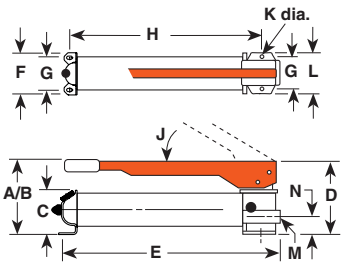

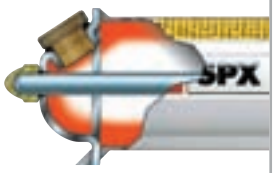

Power Team hand pumps, with the angled fill port, have a built in "relief valve" protection system. This system is designed to protect over-pressurization of the reservoir from sudden back pressure. This system also works as a seal to prevent oil leaks.

Pump No.	A (mm)	B (mm)	C (mm)	D (mm)	E (mm)	F (mm)	G (mm)	H (mm)	J (deg.)	K (mm)	L (mm)	M (in)	N (mm)
P12	101,6	—	—	101,6	342,9	85,7	55,6	—	45°	4,8	85,7	3/8-NPTF	28,6
* **P23**	158,8	330,2	88,9	141,3	346,1	108,0	82,6	261,6	38°	7,9	120,7	3/8-NPTF	41,3
* The P23 pump maximum pressure is 210 bar only.													
P55	165,1	533,4	88,9	141,3	584,2	108,0	82,6	501,7	38°	7,9	120,7	3/8-NPTF	41,3

For Use With	Order No.	Volume & Pressure: Volume per Stroke (cm³) Speed	LP	HP	Maximum Pressure (bar) LP	HP	Handle Effort (kg)	Reservoir: Oil Capacity (cm³)	Usable Oil Capacity (cm³)	Oil Port (in)	Product Weight (kg))
Single Acting Cylinders*	**P12**	1	—	1,1	—	700	34	197	148	3/8-NPTF	2,6
	P23	1	—	2,6	—	210	32	390	333	3/8-NPTF	5,5
	P55	1	—	2,6	—	700	66	902	738	3/8-NPTF	7,2

LP = Low Pressure
HP = High Pressure

* Pump includes 2-Way Valve

POWER TEAM

Hand Pump
HYDRAULIC P SERIES

400 to 1131 cm³ reservoir
Two-Speed
Single-Acting

Pump automatically shifts into the high pressure lift stage upon contact with the load.

700 bar

P59L

- All metal construction won't burn through in welding environments.
- Two-speed reduces handle strokes so you work faster and easier.
- Formed metal handle provides less flex, and reduces operator fatigue.
- Convenient fill port allows pumps to be filled in a horizontal or vertical position.
- Relief valve inboard of check valve prevents loads from drifting down.
- Large valve knob gives added control for slowly metering loads down.

P19L/P59L

- More usable oil volume — use with larger or longer stroke cylinders.
- True unloading valve set for 850 PSI (59 Bar) provides more efficiency and lower handle force.
- Link design reduces handle effort by 40%.
- Durable aluminum reservoir, manifold, and end cap.
- Ergonomic non-slip handle grip provides more comfort.
- Spring loaded handle lock incorporated into handle.

P19

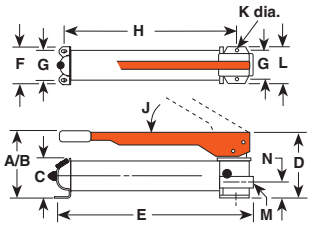

Pump No..	A (mm)	B (mm)	C (mm)	D (mm)	E (mm)	F (mm)	G (mm)	H (mm)	J (deg.)	K (mm)	L (mm)	M (in)	N (mm)
P19	139,7	371,5	73,0	115,9	347,7	101,6	82,6	281,0	53°	7,9	101,6	3/8-NPTF	35,7
P19L	141,5	—	—	—	347	104,1	82,6	281,0	40°	7,9	104,1	3/8-NPTF	—
P59	177,8	533,4	88,9	127,0	584,2	108,0	82,6	501,7	38°	7,9	120,7	3/8-NPTF	41,3
P59L	177,6	—	—	—	533,4	120,7	82,6	501,7	50°	7,9	120,7	3/8-NPTF	—
P59F	88,9	425,5	88,9	152,4	590,6	108,0	82,6	514,4	—	7,9	114,3	3/8-NPTF	42,9

For Use With	Order No.	Volume & Pressure: Speed	Volume per Stroke (cm³) LP	Volume per Stroke (cm³) HP	Maximum Pressure (bar) LP	Maximum Pressure (bar) HP	Handle Effort (kg)	Reservoir: Oil Capacity (cm³)	Usable Oil Capacity (cm³)	Oil Port (in)	Product Weight (kg)
Single Acting Cylinders*	**P19**	2	5,0	1,2	22	700	45	400	328	3/8-NPTF	3,0
	P19L	2	4,1	0,9	70	700	37	475	443	3/8-NPTF	2,3
	P59	2	10,9	2,6	22	700	66	902	738	3/8-NPTF	7,8
	P59L	2	12	2,6	59	700	44	1131	1082	3/8-NPTF	4,1
	P59F	2	9,0	2,1	22	700	55	902	738	3/8-NPTF	6,4

LP = Low Pressure
HP = High Pressure

*Pump includes 2-Way Valve

CYLINDER/PUMP MATCHING — Page 6
CYLINDERS — Page 12
PUMP/CYLINDER SETS — Page 61
PUMP ACCESSORIES — Page 116
HYDRAULIC ACCESSORIES — Page 120

Hand Pump
HYDRAULIC P SERIES

9,5 liter reservoir
Two-Speed Single- and Double-Acting

Best suited for applications where there is little or no free travel.

PUMPS


P157/P159

- Rugged all metal construction for strength and durability that won't burn through in welding environments.
- Heavy-duty, formed metal handle provides less flex, and less operator fatigue than round or composite handles.
- Convenient fill port on P23 and P55 allows pumps to be filled in a horizontal or vertical position.
- Fill cap seal acts as safety valve to prevent over-pressurizing of reservoir.
- Relief valve inboard of check valve prevents loads from drifting down.
- Large valve knob gives added control for slowly metering loads down.

P300


P460

P300 hand pump and 10 ton cylinders used for a vehicle lift.

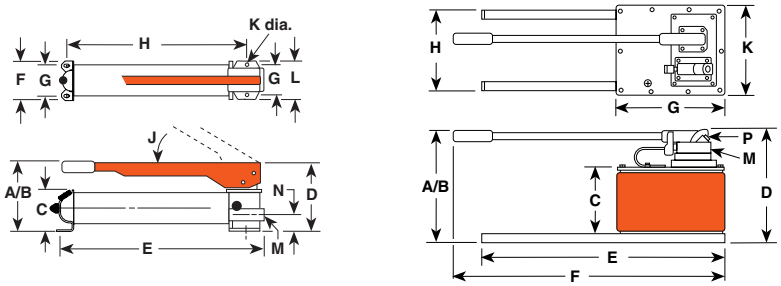

Pump No.	A (mm)	B (mm)	C (mm)	D (mm)	E (mm)	F (mm)	G (mm)	H (mm)	J (deg.)	K (mm)	L (mm)	M (in)	N (mm)	P
P157/ P159	197	521	123,8	175	578	98,4	76,2	502	39°	7,9	95,3	3/8-NPTF	57,2	—
P300	210	533	114,3	175	575	215,9	190,5	526	39°	7,9	95,3	3/8-NPTF	57,2	—
P460	283	787	171,5	289	610	743	279,4	229	80°	241,3	—	3/8-NPTF	—	1/4 NPTF

FK59
FK159B

Foot pump conversion kit

No. FK59 - Foot pump conversion kit for use on P55/P59 pumps. Wt., 2,7 kg.

No. FK159B – Foot pump conversion kit for use on P157/P159 and P300/P300D pumps. Wt., 2,7 kg.

For Use With	Order No.	Volume & Pressure: Speed	Volume per Stroke (cm³) LP	Volume per Stroke (cm³) HP	Maximum Pressure (bar) LP	Maximum Pressure (bar) HP	Reservoir Handle Effort (kg)	Oil Capacity (cm³)	Usable Oil Capacity (cm³)	Oil Port (in)	Product Weight (kg)
Single-	**P157**	2	10,7	2,6	97	700	64	2491	2245	3/8-NPTF	11,8
Acting	**P159**	2	42,6	2,6	22	700	64	2491	2245	3/8-NPTF	11,8
Cylinders*	**P300**	2	42,6	2,6	22	700	64	5.700	5081	3/8-NPTF	25,1
	P460	2	120,5	4,6	22	700	41	9.500	7539	3/8-NPTF	24,9
Double-	**P157D**	2	10,7	2,6	97	700	64	2491	2245	3/8-NPTF	13,1
Acting	**P159D**	2	42,6	2,6	22	700	64	2491	2245	3/8-NPTF	12,7
Cylinders**	**P300D**	2	42,6	2,6	22	700	64	5.700	5081	3/8-NPTF	25,9
	P460D	2	120,5	4,6	22	700	41	9.500	7539	3/8-NPTF	26,3

LP = Low Pressure
HP = High Pressure

* Pump includes 2-Way Valve
** Pump includes 4-Way Valve

POWER TEAM

Cylinder/Pump
HYDRAULIC RPS SERIES

Cylinder and pump combinations

Precision-matched cylinder and pump combinations for wide range of applications.

RPS1006

- Four styles of cylinders to choose from.
- Sets feature single- or two-speed hydraulic hand pumps.
- Cylinders of various tonnages with long, medium or short stroke.
- Includes necessary fittings, couplers and 1,8m hose.
- Gauge and gauge mounting adapter is recommended. (See pages 124-125)

RPS55

700 bar
ASMEB30-1

Note: Actual product may differ from photo.

RPS203H

Optional Storage Box Storage box for hydraulic cylinder and pump sets. Rugged industrial strength material, strong as steel, never needs painting, won't rust, dent or chip. Weatherproof lid is self sealing and lockable. Molded-in handles, water-tight, one piece bottom and side construction. Strong enough to stand on. **No. 350722** – 890mmL x 356mmH x 343mmW, storage box.

Style Of Cyl.	Cyl. Cap. (Tons)	Stroke (mm)	Order No.	Retracted Height (mm)	Handle Strokes Required to Fully Extended Cylinder	Cyl.-No.	Pump No.	Hose No.	Coupler No.	Pump Speed	Prod. Wt. (kg)
	5	133,4	**RPS55**	216	75	C55C	P12	9756	9798	Single	5,4
	10	54,0	**RPS102****	121	32	C102C	P55	9756	9798	Single	11,8
	10	155,6	**RPS106****	248	93	C106C	P55	9756	9798	Single	14,5
	10	257,2	**RPS1010****	349	154	C1010C	P55	9756	9798	Single	16,1
"C"-	15	104,8	**RPS154****	200	81	C154C	P55	9756	9798	Single	13,1
Series	15	155,6	**RPS156****	271	118	C156C	P55	9756	9798	Single	15,4
	25	158,8	**RPS256****	273	219	C256C	P55	9756	9798	Single	19,3
	25	362,0	**RPS2514****	476	285*	C2514C	P159	9756	9798	Two	28,4
	55	158,8	**RPS556****	283	268*	C556C	P159	9756	9798	Two	37,5
	100	168,3	**RPS1006**	337	428*	C1006C	P460	9756	9798	Two	58,3
"Shorty"	30	61,9	**RPS302****	117	61*	RSS302	P59	9756	9798	Two	18,1
	50	60,3	**RPS552****	127	89*	RSS502	P59	9756	9798	Two	22,7
	100	57,2	**RPS1002****	140	172*	RSS1002	P59	9756	9798	Two	36,7
"Center-Hole"	20	76,2	**RPS203H****	154	80	RH203	P55	9756	9798	Single	18,3
Alum.	55	155,6	**RPS556A****	273	262*	RA556	P159	9756	9798	Two	21,3

* Base on 50% if the stroke being made at low-pressure and 50% of the strokes at high pressure.

** Add suffix "B" (example: RPS102B, RPS203HB, etc.) to order set with optional storage box shown above.

CYLINDER/PUMP MATCHING Page 6 | CYLINDERS Page 12 | PUMP/CYLINDER SETS Page 61 | PUMP ACCESSORIES Page 116 | HYDRAULIC ACCESSORIES Page 120

Air Pump
HYDRAULIC PA6 SERIES

Single-Acting

Compact, lightweight and portable. Single-Speed pumps designed to drive single-acting cylinders.

PUMPS

- The power unit of choice for major manufacturers of auto body, frame straighteners and other equipment.
- Operate at 3-8 bar shop air pressure at the pump.
- dBA 85 at 700 bar.
- Serviceable pump motor is not a “throw away”, providing economical repair.
- Permanently vented reservoir cap.
- Internal relief valve protects circuit components, air inlet filter protects motor.

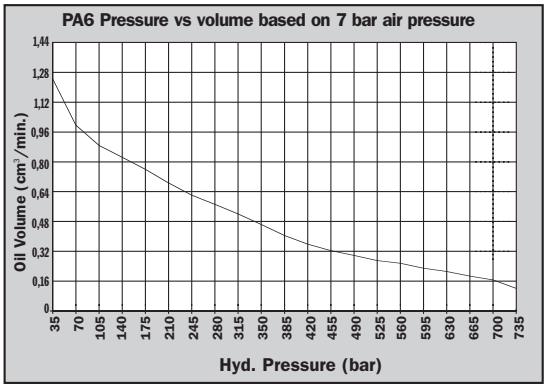

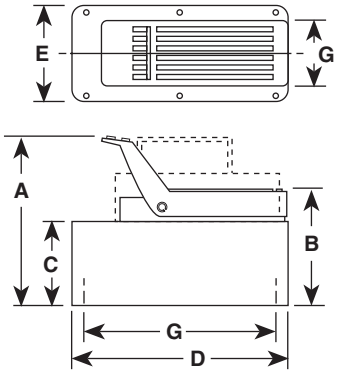

Pump No.	A (mm)	B (mm)	C (mm)	D (mm)	E (mm)	G (mm)
PA6	197	149	111	241	127	102 x 229
PA6A	197	149	111	241	127	102 x 229
PA6AM	197	149	111	241	127	102 x 229
PA6M	197	149	111	241	127	102 x 229
PA6R	197	149	111	241	127	102 x 229
PA6RM	197	149	111	241	127	102 x 229
PA6M-1	200	152	111	321	187	—
PA6AM-2	254	197	171	292	241	203 x 254
PA6-2	260	203	178	292	241	130 x 181

POWER TEAM

PA6M-1

PA6-2

Typical Set-up
Hook-up for single-acting cylinders

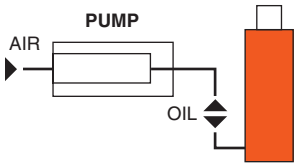

Description	Order No.	Air Supply Req'd (bar)	Reservoir Cap. (l)	Reservoir Usable (l)	Oil Port (in)	Prod. Wt. (kg)
Base model pump with high density polyethylene reservoir.	**PA6**	3-8	1,7	1,6	3/8-NPTF	6,3
PA6 with externally adjustable relief valve.	**PA6A**	3-8	1,7	1,6	3/8-NPTF	6,8
PA6A with metal reservoir.	**PA6AM**	3-8	1,7	1,6	3/8-NPTF	7,7
PA6, except has metal reservoir.	**PA6M**	3-8	1,7	1,6	3/8-NPTF	8,2
PA6 with 3,7m remote control.	**PA6R**	3-8	1,7	1,6	3/8-NPTF	9,3
PA6R, except has metal reservoir.	**PA6RM**	3-8	1,7	1,6	3/8-NPTF	9,8
PA6, except has 3,8 l metal reservoir.	**PA6M-1**	3-8	3,8	3,0	3/8-NPTF	10,7
PA6, except has 7,6 l high density polyethylene reservoir.	**PA6-2**	3-8	7,6	7,3	3/8-NPTF	11,1
PA6, except has 9,5 l metal reservoir.	**PA6M-2**	3-8	9,5	9,1	3/8-NPTF	14,5

CYLINDER/PUMP MATCHING Page 6
CYLINDERS Page 12
PUMP/CYLINDER SETS Page 61
PUMP ACCESSORIES Page 116
HYDRAULIC ACCESSORIES Page 120

Air Pump
HYDRAULIC PA6D SERIES

98 cm³/min.
Double-Acting

Compact, lightweight and portable single-speed pump for driving double-acting cylinders.

PUMPS

- Operate at 3-8 bar shop air pressure at the pump.
- Internal relief valve protects circuit components, air inlet filter protects motor.
- Serviceable pump motor is not a "throw away", providing economical repair.
- Permanently vented reservoir cap.
- dBA 85 at 700 bar for all PA6 pumps.

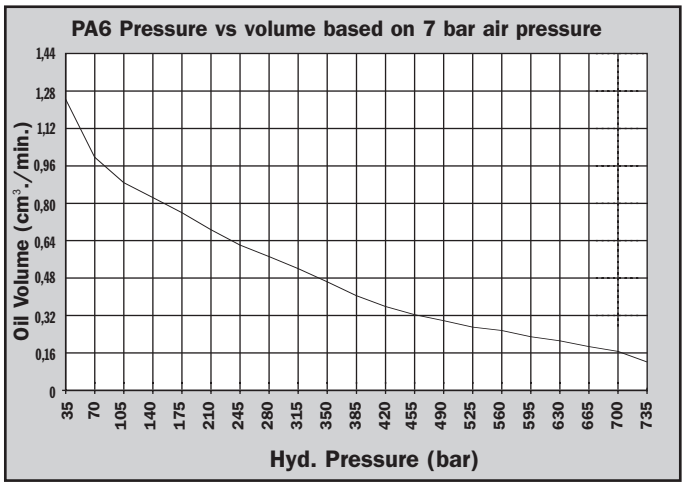

PA6D

700 bar

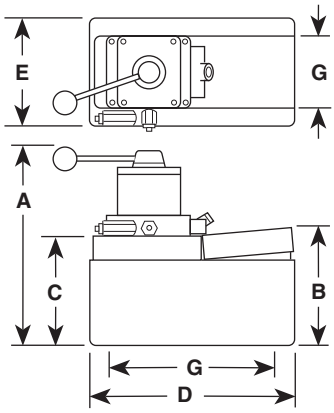

Pump No.	A (mm)	B (mm)	C (mm)	D (mm)	E (mm)	G (mm)
PA6D	264	149	111	241	127	102 x 229
PA6DM	264	149	111	241	127	102 x 229
PA6DM-1	279	146	111	321	187	—
PA6D2	324	203	178	287	235	130 x 181
PA6DM-2	318	197	171	292	241	203 x 254

POWER TEAM

PA6DM-1

PA6D2

PA6D pump, DG100 digital pressure gauge and 25 ton cylinder used in a test fixture.

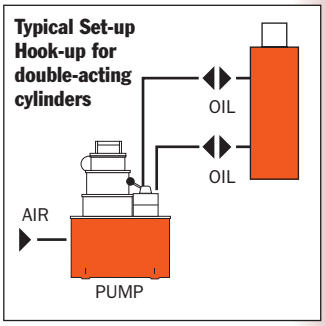

Description	Order No.	Valve No.	Air Supply Req'd (bar)	Reservoir Cap. (l)	Reservoir Usable (l)	Oil Port (in)	Prod. Wt (kg)
Base model pump with high density polyethylene reservoir.	**PA6D**	9504, 3-way/ 4-way	3 - 8	1,7	1,6	3/8-NPTF	8,3
PA6D, except has metal reservoir.	**PA6DM**	9504, 3-way/ 4-way	3 – 8	1,7	1,6	3/8-NPTF	9,2
PA6D, except has 3,8 l metal reservoir.	**PA6DM-1**	9504, 3-way/ 4-way	3 – 8	3,8	3,0	3/8-NPTF	12,7
PA6D, except has 7,6 l, high density polyethylene reservoir.	**PA6D2**	9504, 3-way/ 4-way	3 – 8	7,6	7,3	3/8-NPTF	13,0
PA6D, except has 9,5 l metal reservoir.	**PA6DM-2**	9504, 3-way/ 4-way	3 – 8	9,5	9,1	3/8-NPTF	16,4

CYLINDER/PUMP MATCHING Page 6
CYLINDERS Page 12
PUMP/CYLINDER SETS Page 61
PUMP ACCESSORIES Page 116
HYDRAULIC ACCESSORIES Page 120

Air Pump
HYDRAULIC PA9 SERIES

148 cm³/min.
Single-Acting

Ideal for powering single-acting cylinders and portable hydraulic tools.

PUMPS

- Easier to operate than a hand pump, giving you the speed you need at an affordable price.
- Easy and economical to service; not a "throw away" unit.
- Unique bladder design for all-position operation and storage.
- Operates on 3-8 bar shop air, at 570 l.
- Hard-coat anodized aluminum housing.
- Oil filler with integral safety relief minimizes chance of damage to reservoir bladder if overfilling occurs.

PA9 Foot Control

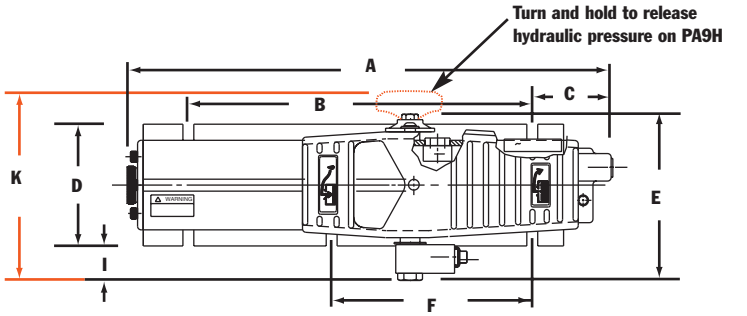

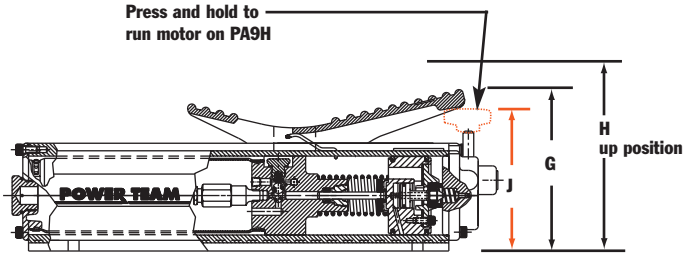

Relief valve settings: up to 700 bar
Mounting holes (standard): 3/8" slots

Pump No.	A (mm)	B (mm)	C (mm)	D (mm)	E (mm)	F (mm)	G (mm)	H (mm)	I (mm)	J (mm)	K (mm)
PA9	432	305	71,4	108	149	178	142	178	28,2	—	—
PA9H	432	305	71,4	108	—	178	—	178	28,2	122	170

POWER TEAM

PA9
Foot Control

PA9H
Hand Control

700 bar

PA9H Hand Control Pump as used in a straightening press.

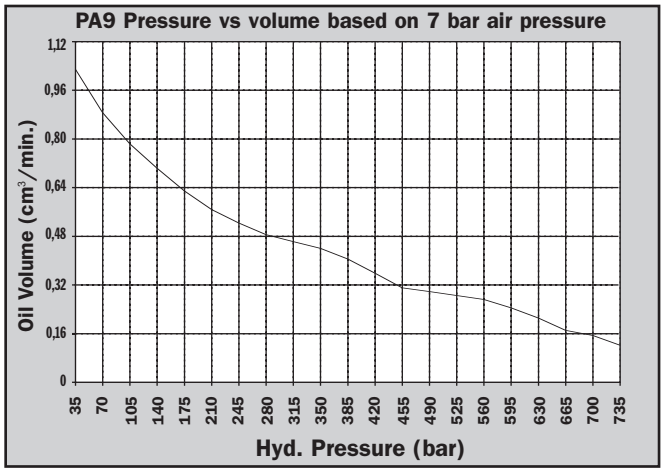

Typical Set-up
Hook-up for single-acting cylinders

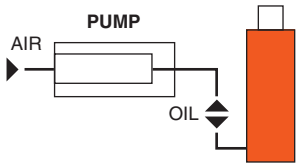

For Use with Cyl. Type	Order No.	Air Supply Req'd (bar)	Reservoir Cap. (cm³)	Reservoir Usable (cm³)	Oil Port (in)	Max. Pressure Output (bar)	Prod. Wt. (kg)
Single-Acting	**PA9**	3 – 8	574	549	3/8-NPTF	700	6,8
Single-Acting	**PA9H**	3 – 8	574	549	3/8-NPTF	700	6,8

CYLINDER/PUMP MATCHING Page 6
CYLINDERS Page 12
PUMP/CYLINDER SETS Page 61
PUMP ACCESSORIES Page 116
HYDRAULIC ACCESSORIES Page 120

Air Pump
HYDRAULIC PA60 SERIES

98 cm³/min.
Two-Speed

Two-speed pump for rapid oil delivery at low pressure quickly advances cylinder or tool.

PUMPS

- Equipped with air pressure regulator, air filter and lubricator.
- Serviceable air motor for economical repair.
- Internal relief valve protects circuit components.
- Permanently vented reservoir cap.

The PA60 used in a workholding environment.

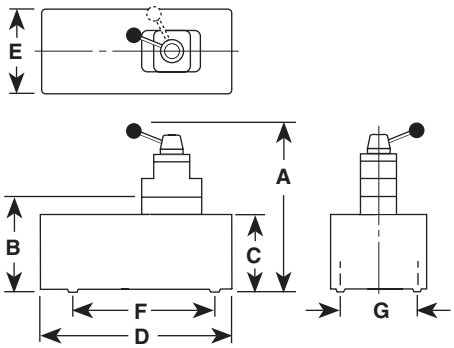

Pump No.	A (mm)	B (mm)	C (mm)	D (mm)	E (mm)	F (mm)	G (mm)	Max. Pressure Output bar	Oil Del. * (l/min) 0 bar	7 bar	70 bar	350 bar	700 bar
PA60	—	240	206	362	244	181	130	700	6,24	5,6	0,8	0,19	0,1
PA64	362	—	206	362	244	181	130	700	6,24	5,6	0,8	0,19	0,1

* Typical delivery. Actual flow will vary with field conditions.

POWER TEAM

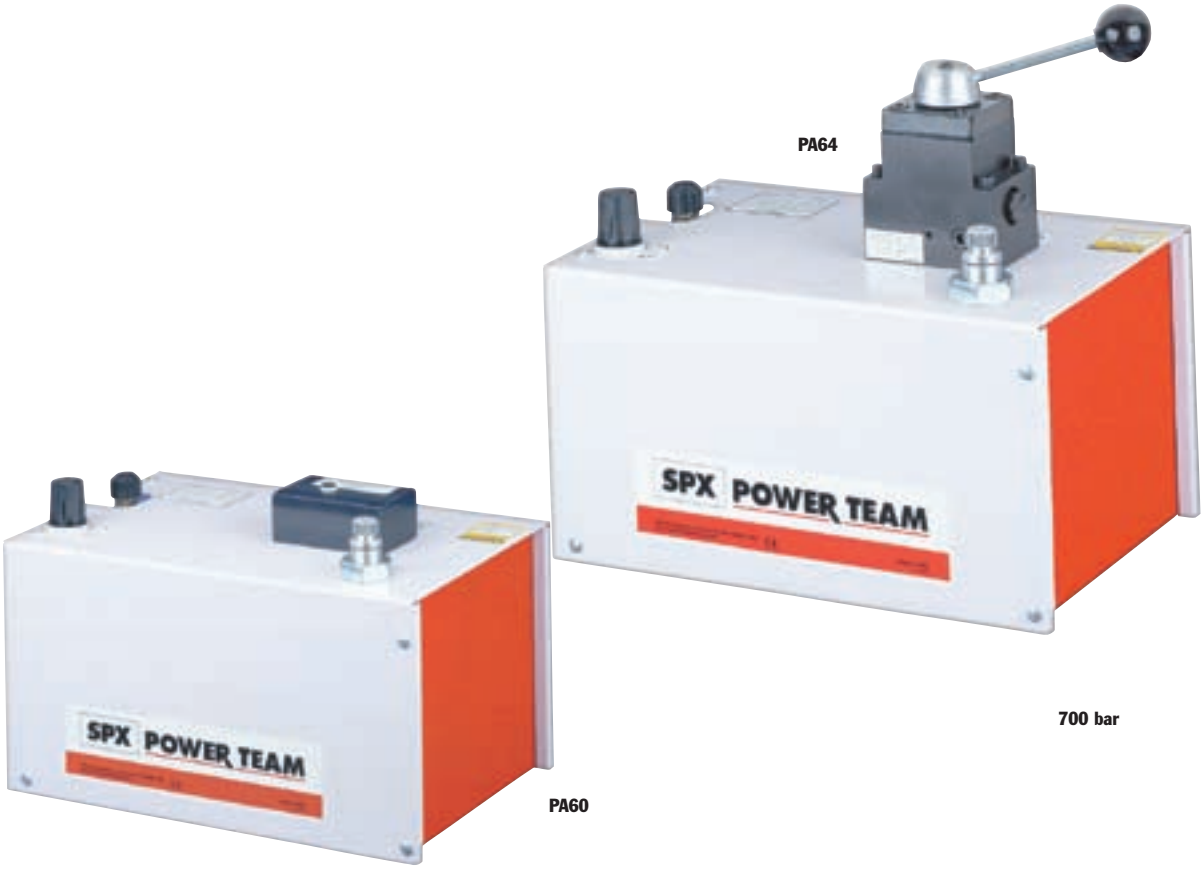

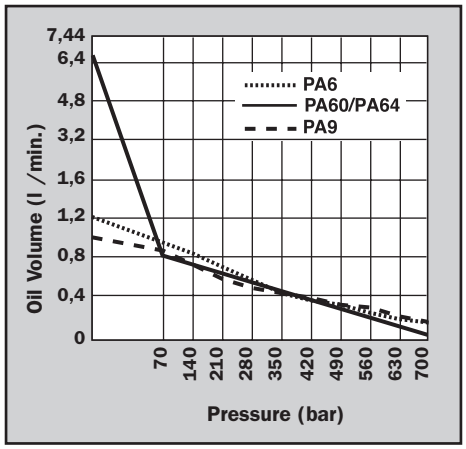

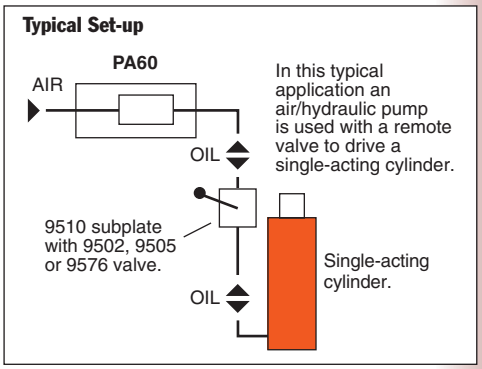

Description	Order No.	Valve No.	Valve Function	Air Supply Req'd bar	Reservoir Cap. (l)	Reservoir Usable (l))	Oil Port (in)	Prod. Wt (kg)
For use with remote valves.	**PA60**	Manifold	—	3 - 8	7,6	6,8	3/8-NPTF	24,5
For use with single- or double-acting cylinders.	**PA64**	9507, 3-way/ 4-way	Advance Hold Return	3 –8	7,6	6,8	3/8-NPTF	24,5

Notes: Air inlet port 1/4" NPTF. Requires 570 l at 7 bar shop air pressure at the pump.

CYLINDER/PUMP MATCHING Page 6
CYLINDERS Page 12
PUMP/CYLINDER SETS Page 61
PUMP ACCESSORIES Page 116
HYDRAULIC ACCESSORIES Page 120

Air Pump
HYDRAULIC PA50 SERIES

460 cm³/min.
Low Pressure

Single-speed, low pressure (220 bar) output pumps.

PUMPS

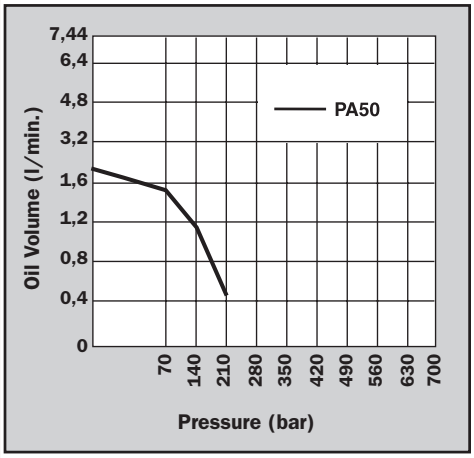

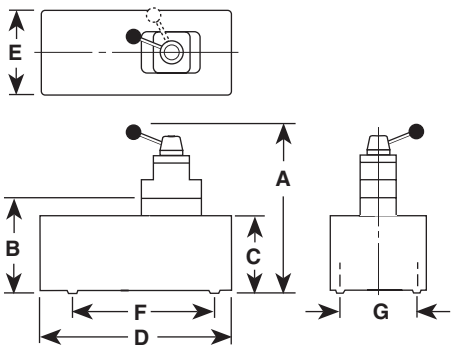

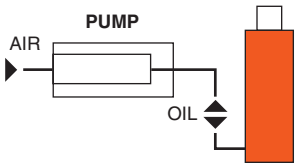

Pump No.	A (mm)	B (mm)	C (mm)	D (mm)	E (mm)	F (mm)	G (mm)	Max. Pressure Output bar	Oil Del. * (l/min) 0 bar	7 bar	70 bar	220 bar
PA50, PS50R PA50M, PA50RM	197	149	111	241	127	—	102 x 229	220	2,05	1,76	1,41	0,45 †
PA50R2	260	203	178	292	241	—	130 x 181	220	2,05	1,76	1,41	0,45 †
PA50D	264	149	111	241	127	229	102	220	2,05	1,76	1,41	0,45 †

* Typical delivery. Actual flow will vary with field conditions.
† PA50 Series measured at 220 bar.

POWER TEAM

- Serviceable air motor for economical repair.
- Air inlet filter protects motor. Filter in outlet port protects against contaminated systems.
- Assorted reservoirs to suit your application's requirements.

Typical Set-up
Hook-up for single-acting cylinders

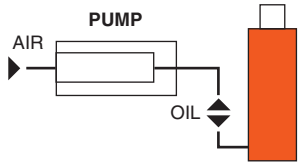

PA50R2

For use with Cyl. Type	Description	Order No.	Valve No.	Air Supply Req'd bar	Reservoir Cap. (l)	Reservoir Usable (l)	Oil Port (in)	Prod. Wt (kg)
Single-Acting	Base model pump with high density polyethlene reservoir.	**PA50**	—	3 - 8	1,7	1,6	3/8-NPTF	6,4
Single-Acting	PA50, except has metal reservoir.	**PA50M**	—	3 – 8	1,7	1,6	3/8-NPTF	7,3
Single-Acting	PA50, except has 3.7 meter 12 foot remote control.	**PA50R**	—	3 - 8	1,7	1,6	3/8-NPTF	8,4
Single-Acting	PA50R, except has metal reservoir.	**PA50RM**	—	3 - 8	1,7	1,6	3/8-NPTF	9,3
Single-Acting	PA50R, except has 7.6 liter reservoir 2 gallon reservoir.	**PA50R2**	—	3 - 8	7,6	7,3	3/8-NPTF	12,9
Single- and Double Acting	PA50, except designed to operate either single- or double-acting systems. Valve function: Advance/Return.	**PA50D**	9504, 3-way/ 4-way	3 - 8	1,7	1,6	3/8-NPTF	8,3

Notes: Air inlet port 1/4" NPTF. Requires 570 l at 7 bar shop air pressure at the pump.

CYLINDER/PUMP MATCHING Page 6
CYLINDERS Page 12
PUMP/CYLINDER SETS Page 61
PUMP ACCESSORIES Page 116
HYDRAULIC ACCESSORIES Page 120

Air Pump
HYDRAULIC PA17 SERIES

279 cm³/min.
Two Speed

Rotary-style air motor. Use where air is preferred source of energy, where electricity is unavailable or sparks are a concern.

- Two-speed operation for high speed cylinder advance.
- Durable 7,6 liter thermoplastic reservoir. (Metal reservoir conversion kits are available.)
- Features air motor capable of starting under full load.

The PA17 used with a flange spreader

PUMPS

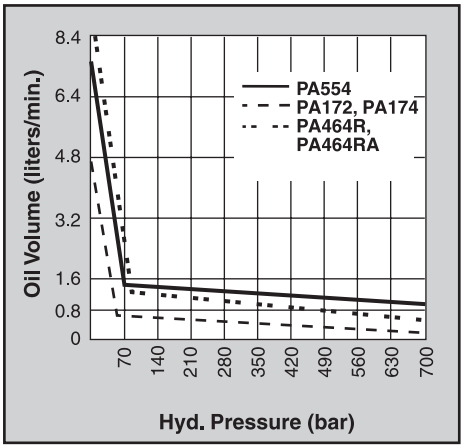

PA172

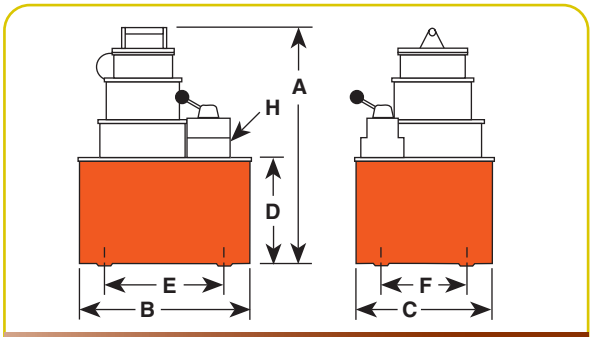

Pump No.	A (mm)	B (mm)	C (mm)	D (mm)	E (mm)	F (mm)	H (mm)	Max. Pressure Output bar	Oil Del. * (l/min) 0 bar	7 bar	70 bar	350 bar	700 bar
PA172	359	289	235	178	181	130	3/8-NPTF	700	4,6	3,8	0,4	0,4	0,3
PA174	359	289	235	178	181	130	3/8-NPTF	700	4,6	3,8	0,4	0,4	0,3

* Typical delivery. Actual flow will vary with field conditions.

POWER TEAM

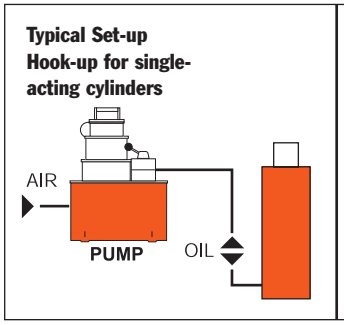

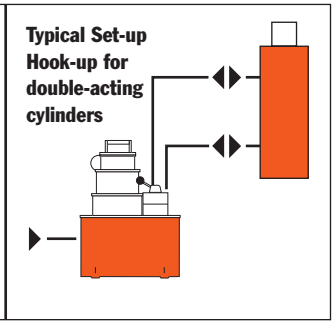

700 bar

PA174

For use with Cyl. Type	Description	Order No.	Valve No.	Valve Function	Air Supply Req'd bar	Reservoir Cap. (l)	Reservoir Usable (l)	Prod. Wt (kg)
Single-Acting	Base model pump with 7.6 liter 2 gallon thermoplastic reservoir.	**PA172**	9517, 2-way	Advance/Return*	3 - 8	7,6	4,7	18,1
Single- and Double Acting	PA172, except has 9500 valve for use with single- or double-acting cylinders.	**PA174**	9500, 4-way	Advance Hold Return*	3 - 8	7,6	4,7	18,6

Note: Requires 570 l at 6 bar shop air pressure at the pump. dBA 85/90 at 700 bar.

* Holds pressure in advance position when valve motor is shut off, in return position with motor running. Pump will build pressure when motor is shut off, oil returns to reservoir.

CYLINDER/PUMP MATCHING Page 6
CYLINDERS Page 12
PUMP/CYLINDER SETS Page 61
PUMP ACCESSORIES Page 116
HYDRAULIC ACCESSORIES Page 120

Air Pump
HYDRAULIC PA46/55 SERIES

Up to 150 ton Cylinders
754-902 cm³/min.
Two Speed

Rotary-style air motor.
Use where air is the preferred source of energy.

- 2,2 kW motor starting under full load.
- Two-speed operation for rapid cylinder advance.
- Models available with full remote control over advance and return, (except PA554).
- Tandem center valve holds the load when pump is shut off.

700 bar

PA462

PUMPS

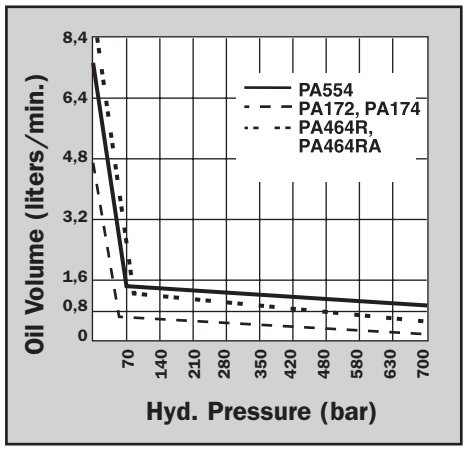

PA554 pump and RH2008 Center Hole cylinder used to tension cables.

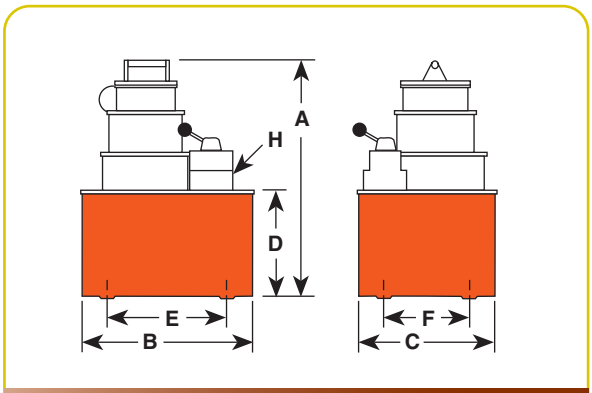

Pump No.	A (mm)	B (mm)	C (mm)	D (mm)	E (mm)	F (mm)	H (mm)	Max. Pressure Output bar	Oil Del. * (l/min) 0 bar	7 bar	70 bar	350 bar	700 bar
PA462	381	292	241	178	254	203	3/8 NPTF	700	7,4	7,2	0,8	0,8	0.7
PA464	381	292	241	178	254	203	3/8 NPTF	700	7,4	7,2	0,8	0,8	0,7
PA464R	381	292	241	178	254	203	3/8 NPTF	700	7,4	7,2	0,8	0,8	0,7
PA464RA	381	292	241	178	254	203	3/8 NPTF	700	7,4	7,2	0,8	0.8	0,7
PA554	483	292	241	178	254	203	3/8 NPTF	700	7,4	7,2	1,3	1,1	0,7

* Typical delivery. Actual flow will vary with field conditions.
Note: Four mounting holes 1/2" - 20

POWER TEAM

PA464R

PA554

Typical Set-up
Hook-up for single-acting cylinders

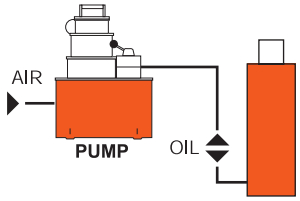

Typical Set-up
Hook-up for double-acting cylinders

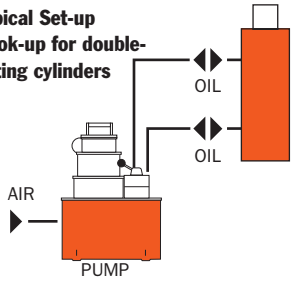

For use with Cyl. Type	Description	Order No.	Valve No.	Valve Function	Air Supply Req'd bar	Reservoir Cap. (l)	Reservoir Usable (l)	Prod. Wt (kg)
Single-Acting	Base model pump with 9,5 l steel reservoir.	**PA462**	9584, 2-way	Advance/Hold/ Return	3 – 8	9,5	9,4	27,2
Single- and Double Acting	PA462, except has 9500 valve capable of running 2 single-acting cylinders or one double-acting cylinder.	**PA464**	9500, 4-way	Advance/Hold/ Return*	3 – 8	9,5	9,4	27,6
Single- and Double Acting	PA462 with air actuated valve for full remote control over advance and return. Includes 3,7m remote control.	**PA464R†**	9594, 4-way	Advance/Hold/ Return	3 – 8	9,5	9,4	35,3
Single- and Double Acting	PA464R except, has automatic dump feature. 7,6 m remote control.	**PA464RA****†	9594, 4-way	Advance/Hold/ Return*	3 – 8	9,5	9,4	35,8
Single- and Double Acting	High performance pump with 9,5 l steel reservoir.	**PA554**	9500, 4-way	Advance/Hold/ Return*	3 - 8	9,5	8,4	32,0

Note: Requires 570 l at 6 bar shop air pressure at the pump. dBA 85/90 at 700 bar.

* Holds when motor is shut-off and valve is in "advance" position.

† The PA464RA has an "automatic dump" feature. Pressure is not held when operator releases "advance" or "return" button. PA464R will "hold" only in the "advance" position with the motor shut off.

** Not to be used for lifting.

CYLINDER/PUMP MATCHING Page 6
CYLINDERS Page 12
PUMP/CYLINDER SETS Page 61
PUMP ACCESSORIES Page 116
HYDRAULIC ACCESSORIES Page 120

Air Operated
PUA & PMA SERIES

2410 bar

Suitable for pumping a wide range of fluids at pressures up to 35,000 psi (2,410 bar).

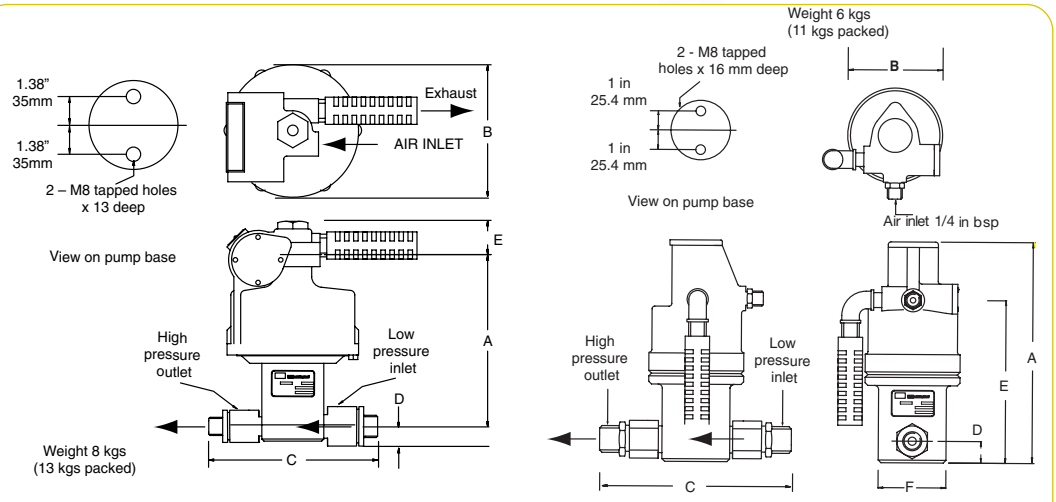

CAT #	RAM/DIAMETER (mm)	RAM/DIAMETER (in)		A	B	C	D	E	F
PUA26(B/U)	31.75	1 1/4	in	9.17	4.02	6.61	.87	6.69	2.87
			mm	233	102	168	22.2	170	73
PUA70(B/U)	19	3/4	in	8.74	4.02	6.61	.87	6.22	2.87
			mm	222	102	168	22.2	158	73
PUA157(B/U)	12.7	1/2	in	8.74	4.02	6.61	.87	6.22	2.87
			mm	222	102	168	22.2	158	73
PUA275(B/U)	9.53	3/8	in	8.74	4.02	6.61	.87	6.22	2.87
			mm	222	102	168	22.2	158	73
PUA430(B/U)	7.94	5/16	in	8.74	4.02	6.61	.87	6.22	2.87
			mm	222	102	168	22.2	158	73
PUA655(B/U)	6.35	1/4	in	8.74	4.02	6.61	.87	6.22	2.87
			mm	222	102	168	22.2	158	73
PUA982(B/U)	5.13	.202	in	8.74	4.02	6.61	.87	6.22	2.87
			mm	222	102	168	22.2	158	73
PMA27(B/U)	76.2	3	in	8.66	7.01	9.06	1.5	1.89	
			mm	220	178	230	38	48	
PMA60(B/U)	50.8	2	in	8.27	7.01	9.06	1.5	1.89	
			mm	210	178	230	38	48	
PMA90(B/U)	41.3	1 5/8	in	8.27	7.01	9.06	1.5	1.89	
			mm	210	178	230	38	48	

CAT #	RAM/DIAMETER (mm)	RAM/DIAMETER (in)		A	B	C	D	E	F
PMA130(B/U)	35	1 3/8	in	7.99	7.01	7.68	.87	1.89	
			mm	203	178	195	22	48	
PMA190(B/U)	28.5	1 1/8	in	7.99	7.01	7.68	.87	1.89	
			mm	203	178	195	22	48	
PMA240(B/U)	25.4	1	in	7.99	7.01	7.68	.87	1.89	
			mm	203	178	195	22	48	
PMA370(B/U)	20.6	13/16	in	7.99	7.01	7.01	.87	1.89	
			mm	203	178	178	22	48	
PMA520(B/U)	17.5	11/16	in	7.99	7.01	7.01	.87	1.89	
			mm	203	178	178	22	48	
PMA770(B/U)	14.3	9/16	in	7.99	7.01	7.01	.87	1.89	
			mm	203	178	178	22	48	
PMA980(B/U)	12.7	1/2	in	7.99	7.01	7.01	.87	1.89	
			mm	203	178	178	22	48	
PMA1740(B/U)	9.5	3/8	in	7.99	7.01	10.08	.87	1.89	
			mm	203	178	256	22	48	
PMA2410(B/U)	8	5/16	in	7.99	7.01	10.08	.87	1.89	
			mm	203	178	256	22	48	

- Provides infinitely variable capacity and discharge pressure
- Suitable for continuous start/stop applications
- Pumps oil, water, and other fluids
- Stainless steel pump and check valves standard
- Maintains pressure with minimal power consumption (Non-load holding)
- Usable in hazardous areas: per ATEX II, CAT. 2 GDcT5
- Quiet operation
- Can operate on gases other than air
- Simple to install and maintain
- Compact, rugged design
- Only 15psi (1bar) air pressure required to start pump

BSP FITTINGS	NPT FITTINGS	RATIO 1:	OUTLET PRESSURE (BAR)	OUTLET PRESSURE (PSI)	OUTPUT PER CYCLE (LITRES)	OUTPUT PER CYCLE (IN^3)	MAXIMUM FLOW AT ZERO PRESSURE (LITRES/MIN)	MAXIMUM FLOW AT ZERO PRESSURE (IN^3/MIN)	INLET	OUTLET
PUA26B	PUA26U	4.3	26	380	0.028	1.68	14	850	1/2" BSP/NPT	1/2" BSP/NPT
PUA70B	PUA70U	11.9	70	1,010	0.01	0.607	5	305	1/2" BSP/NPT	1/2" BSP/NPT
PUA157B	PUA157U	26.7	157	2,280	0.004	5.269	2.4	146	1/2" BSP/NPT	1/2" BSP/NPT
PUA275B	PUA275U	47.5	275	3,990	0.0025	0.151	1.4	85	1/2" BSP/NPT	1/2" BSP/NPT
PUA430B	PUA430U	68.4	430	6,230	0.0017	0.105	0.9	55	1/2" BSP/NPT	1/2" BSP/NPT
PUA655B	PUA655U	107	655	9,500	0.0011	0.67	0.6	36	1/2" BSP/NPT	1/2" BSP/NPT
PUA982B	PUA982U	163.8	982	14,250	0.0007	0.044	0.4	24	1/2" BSP/NPT	1/2" BSP/NPT
PMA27B	PMA27U	4	27	390	0.16	9.72	37	2260	1" BSP/NPT	3/4" BSP/NPT
PMA60B	PMA60U	9	60	870	0.07	4.32	23	1400	1" BSP/NPT	3/4" BSP/NPT
PMA90B	PMA90U	13.6	90	1,300	0.05	2.85	15	915	1" BSP/NPT	3/4" BSP/NPT
PMA130B	PMA130U	19	130	1,880	0.034	2.04	11	670	3/4" BSP/NPT	1/2" BSP/NPT
PMA190B	PMA190U	28.4	190	2,750	0.023	1.37	7.3	455	3/4" BSP/NPT	1/2" BSP/NPT
PMA240B	PMA240U	36	240	3,480	0.018	1.08	5.8	354	3/4" BSP/NPT	1/2" BSP/NPT
PMA370B	PMA370U	54.5	370	5,360	0.012	0.71	3.8	230	1/2" BSP/NPT	1/2" BSP/NPT
PMA520B	PMA520U	76.5	520	7,540	0.008	.51	2.8	170	1/2" BSP/NPT	1/2" BSP/NPT
PMA770B	PMA770U	113	770	11,160	0.006	0.34	1.8	110	1/2" BSP/NPT	1/2" BSP/NPT
PMA980B	PMA980U	145	980	14,210	0.004	0.27	1.5	91	1/2" BSP/NPT	1/2" BSP/NPT
PMA1740B	PMA1740U	256	1,740	25,230	0.0025	0.15	0.84	51	1/2" BSP/NPT	1/2" HP
PMA2410B	PMA2410U	368	2,410	35,000	0.0017	0.104	0.58	35	1/2" BSP/NPT	1/2" HP

Air Operated
PUA & PMA SERIES

Performance charts

Suitable for pumping a wide range of fluids at pressures up to 35,000 psi (2,410 bar).

PUMPS

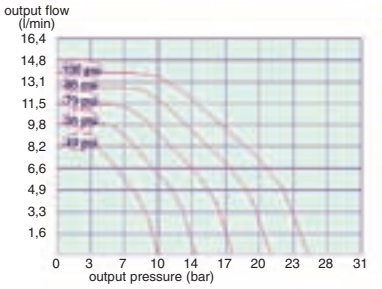

PUA-4:3:1

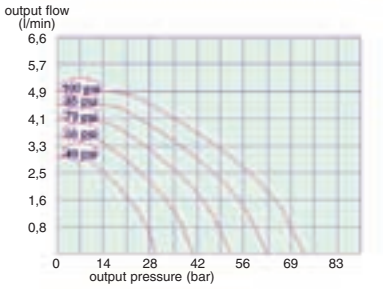

PUA-11:9:1

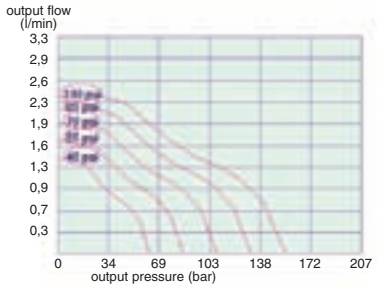

PUA-26.7:1

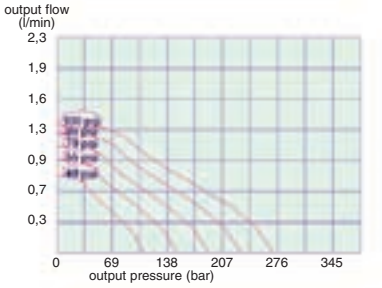

PUA-47.5:1

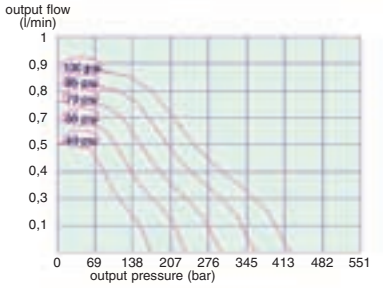

PUA-68.4:1

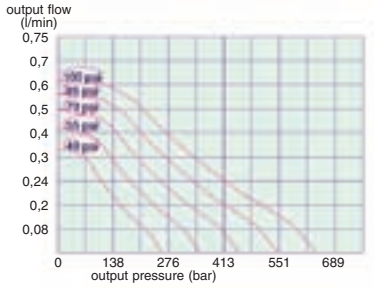

PUA-107:1

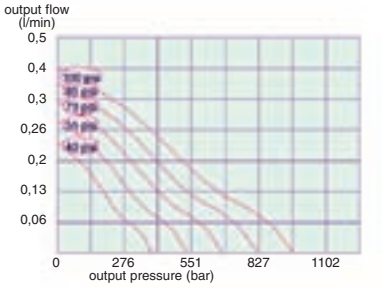

PUA-163.8:1

100 psi	=	6,89 bar
85 psi	=	5,85 bar
70 psi	=	4,82 bar
55 psi	=	3,79 bar
40 psi	=	2,76 bar

POWER TEAM

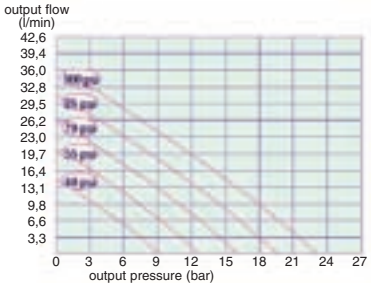

PMA-4:1

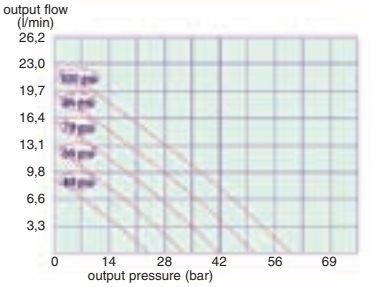

PMA-9:1

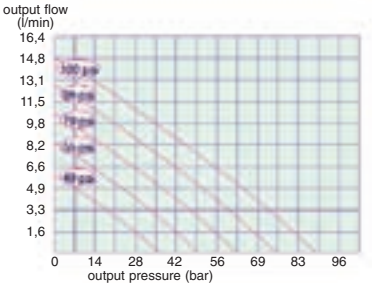

PMA-13.6:1

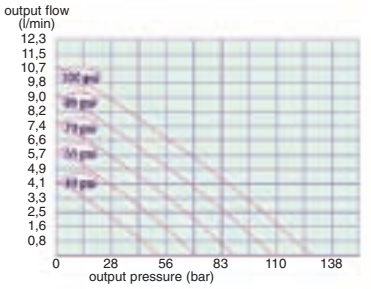

PMA-19:1

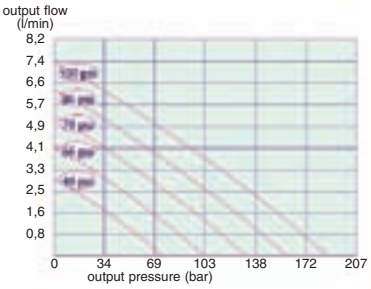

PMA-28.4:1

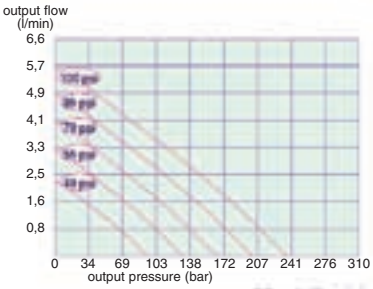

PMA-36:1

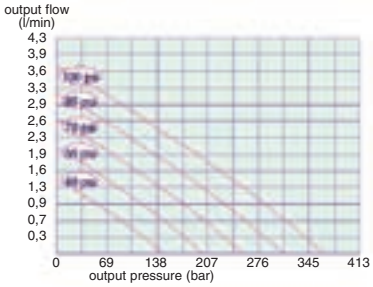

PMA-54.5:1

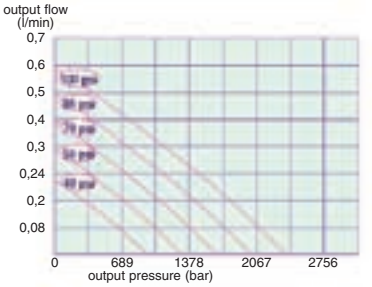

PMA-76.5:1

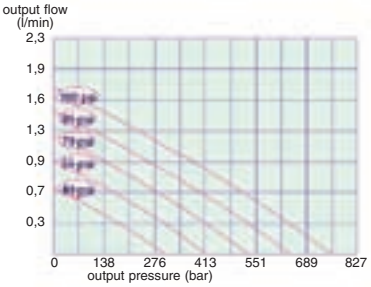

PMA-113:1

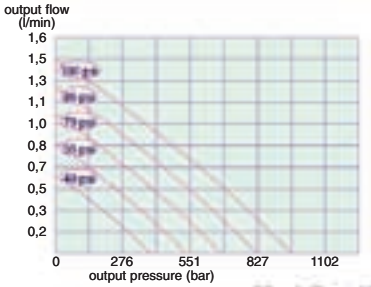

PMA-145:1

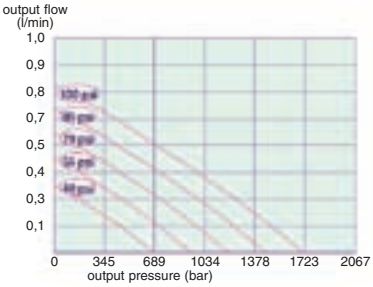

PMA-256:1

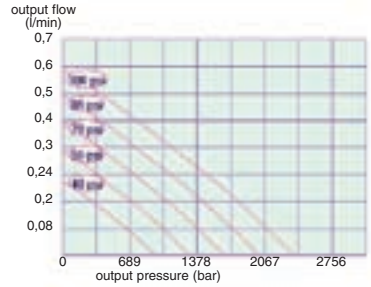

PMA-368:1

Electric/Battery Pump
HYDRAULIC PE10 SERIES

Up to 25 Ton Quarter Horse®
Two Speed

High performance in compact package. Electric and battery powered models for powering tools and cylinders up to 25 ton.

LR19814

PUMPS

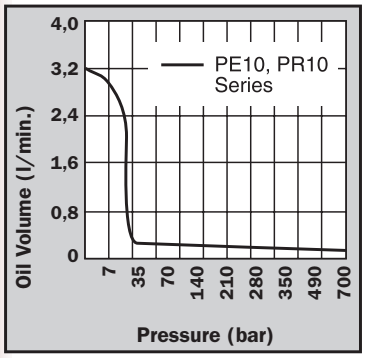

- Portable power source for hydraulic cylinders, and tools.
- Permanent magnet motor starts easily under load, even with reduced voltage conditions.
- Battery-operated models have 2,4 m power cord with alligator clips to connect to any 12 volt battery.
- Optional rechargeable battery pack with shoulder strap for maximum portability.
- Pump typically delivers 15 minutes of continuous operation at 700 bar on a single battery.
- Pump can be operated in any position.
- 24 volt hand and foot switches available for all AC powered models.
- High-impact housing with flame-retardant construction.
- Base mounting holes for fixed installations.

For use with Cyl. Type	Description	Order No.	Valve Type	Valve No.	Valve Function	Control Switch	Motor	Reservoir Usable Cap. (l)
Single-Acting	Base model pump with 0,19 KW motor. Bladder type reservoir, 110 volt power required.	**PE102**	2-Way/ Auto. Dump	9561	Advance Return (Auto.)*	Rocker Type off, Momentary on	0,19 KW, 110/115V 50/60 Hz, Single Phase	1
Single-Acting	PE102, except has automatic dump valve.	**PE102A**	Auto. Dump	9562	Advance Return**	Rocker Type off, Momentary on	0,19 KW, 110/115V 50/60 Hz, Single Phase	1
Single-Acting	PE102, except requires 220 volt.	**PE102-220**	2-Way/ Auto. Dump	9561	Advance Return (Auto.)*	Rocker Type off, Momentary on	0,19 KW, 110/115V 50/60 Hz, Single Phase	1
Single-Acting	PE102A, except requires 220 volt.	**PE102A-220**	Auto. Dump	9562	Advance Return	Rocker Type off, Momentary on	0,19 KW, 220/230V 50/60 Hz, Single Phase	1
Single-Acting	PE102, except requires 12 volt DC.	**PR102**	2-Way/ Auto. Dump	9561	Advance Return (Auto.)*	Rocker Type off, Momentary on	0,19 KW, 12V†	1
Single-Acting	PE102A, except requires 12 volt DC.	**PR102A**	Auto. Dump	9562	Advance Return**	Rocker Type off, Momentary on	0,19 KW, 12V†	1
Single-Acting/ Double-Acting	Base model pump has 4-way valve for operating double-acting systems. 110 volt power required.	**PE104**	4-Way	9563	Advance Hold Return	Rocker Type off, Momentary on	0,19 KW, 110/115V 50/60 Hz, Single Phase	1
Single-Acting/ Double-Acting	PE104, except requires 220 volt.	**PE104-220**	4-Way	9563	Advance Hold Return	Rocker Type off, Momentary on	0,19 KW, 220/230V 50/60 Hz, Single Phase	1
Single-Acting/ Double-Acting	PE104, except requires 12 volt DC.	**PR104**	4-Way	9563	Advance Hold Return	Rocker Type off, Momentary on	0,19 KW, 12V†	1

* "Advance" position holds pressure with motor shut off. "Return" position advances cylinder with motor running and returns cylinder with motor shut off.

** Cylinder advances with motor running and automatically returns with motor shut off.

† Comes with an 2,4 m. alligator clip cord for 12 volt DC use.

PR104

700 bar

The Quarter Horse pump has a maximum operating pressure of 700 bar, which handles a wide variety of hand held hydraulic tools.

Accessories

BP212VQ

BC 212

BP212VQ – Optional 12 volt battery pack. Includes sealed lead acid battery, 115V charger, 1,2 m cord, carrying case and shoulder strap. Wt., 8 kg.

RB12V – Battery only.
BP12INT – Battery with cord and carrying case. Wt., 5 kg.
RC12V – Replacement 1,2 m battery cord only. Wt., 0,2 kg.

BC212 – Battery charger for U.S.A. Wt., 3 kg.
BC212EUR – Battery charger for Europe. Wt., 3 kg.
25017 – Remote hand control with 3 m cord. Wt., 0,4 kg.

Max. Pump No.	Pressure Output (bar)	dBa @ Idle and 700 (bar)	Oil Del. (l/min at..) 0 (bar)	700 (bar)	Overall Dimensions (mm)	Prod. Wt. with Oil (kg)
PE10 Series **PR10 Series**	700	68-74*	1,9	0,16	330 L x 197 W x 203 H	9,1

* Measured at 0,9 m distance, all sides.

NOTE: PR10 rechargeable model is equipped with 2,4 m cord with alligator clips. Order optional battery pack (No. BP212VQ) or use with any 12 volt battery.

NOTE: Amp draw at 700 bar; 6 amp at 115 volt, 3 amp at 230 volt, and 35 amp at 12 volt.

9560 – Pressure regulator. Adjustable from 70 to 700 bar. All mounting hardware included. Wt., 1,4 kg.

251660 – Foot switch with 3 m cord. Single pole, double throw, 15 amp @ 125-250 VAC. Wt., 0,45 kg.

CYLINDER/PUMP MATCHING Page 6
CYLINDERS Page 12
PUMP/CYLINDER SETS Page 61
PUMP ACCESSORIES Page 116
HYDRAULIC ACCESSORIES Page 120

Electric Pump
HYDRAULIC PE17 SERIES

Up to 55 Ton
279 cm^3/min.
2 Speed

For maintenance and construction applications.

PUMPS

- For use with single-acting or double-acting cylinders at operating pressures to 700 bar.
- For intermittent duty; starts under full load.
- Equipped with 0,37Kw (½ hp), 3,450 rpm, single-phase, thermal protected induction motor; 3 m remote control cord (PE172S has 7,6 m cord)
- Low amperage draw; small generators and low amperage circuits can be used as power source.
- Extremely quiet noise level (67-81 dBA).

PE172

700 bar

LR19814

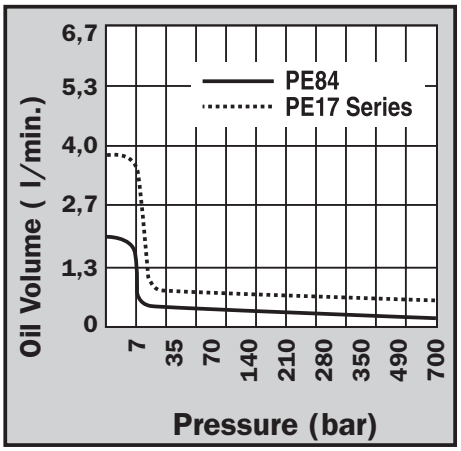

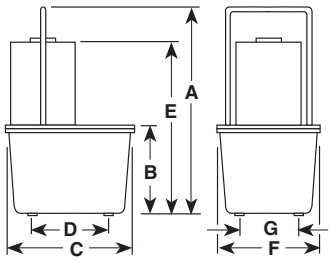

Pump No.	Max. Pressure Output bar	rpm	dBA at Idle and 700 bar	Amp Draw 220 V – at 700 bar	Oil Del. (liters./min. @) † 0 bar	7 bar	350 bar	700 bar	A (mm)	B (mm)	C (mm)	D (mm)	E (mm)	F (mm)	G (mm)	Prod. Wt. with Oil (kg)
PE17 Series	700	2850	67/81*	5	3,9	2,5	0,3	0,2	470	178	289	181	378	235	130	20,4
PE17M Series	700	2850	67/81*	5	3,9	2,5	0,3	0,2	460	168	292	—	368	241	—	24,0

* Measured at 0,9 m distance, all sides.

† Typical delivery. Actual flow will vary with field conditions.

POWER TEAM

PE172SM

PE174

CE

Description	Order No.	Valve Type	Valve No.	Valve Function	Control Switch ††	Motor	Reservoir Usable (l)
Base model pump with 0,37 KW pump with 7,6 l thermoplastic reservoir.	**PE172-50-220**	2-Way	9517	Advance Return (Auto†)	Remote Motor Control (3,1m) on/off	0,37 kW, 220 V* 50/60 Hz, Single Phase	4,72
PE172-50-220, except has 9,5 l aluminum reservoir.	**PE172M-50-220**	2-Way	9517	Advance Return (Auto†)	Remote Motor Control (3,1m) on/off	0,37 kW, 220 V* 50/60 Hz, Single Phase	6
PE172-50-220, except has solenoid operated valve.	**PE172S-50-220**	3-Way	9570	Advance Hold Return	Remote Motor & Valve (7,6 m)	0,37 kW, 220 V* 50/60 Hz, Single Phase	4,72
PE172S-50-220, except has aluminum reservoir.	**PE172SM-50-220**	3-Way	9570	Advance Hold Return	Remote Motor & Valve (7,6 m)	0,37 kW, 220 V* 50/60 Hz, Single Phase	6
Best suited for crimping, punching, pressing. Not for lifting.Thermoplastic reservoir.	**PE172A-50-2208**	Auto./Dump Manifold	45554	Advance Return	Remote Motor Control (3,1 m) on/off	0,37 kW, 220 V* 50/60 Hz, Single Phase	4,72
PE172A, except has aluminum reservoir.	**PE172AM-50-2208**	Auto./Dump Manifold	45554	Advance Return	Remote Motor Control (3,1 m) on/off	0,37 kW, 220 V* 50/60 Hz, Single Phase	6
0,37 KW pump with 7,6 l thermoplastic reservoir. Meets CE requirements.	**PE172-E220**	2-Way	9517	Advance Return (Auto+)	Remote Motor Control (3,1 m) on/off	**CE**	4,72
PE172-50-220,except has 9,5l aluminium reservoir. Meets CE requirements	**PE172M-E220**	2-Way	9517	Advance Return (Auto+)	Remote Motor Control (3,1 m) on/off	**CE**	6
PE172-50-220,except has solenoid operated valve.Meets CE requirements	**PE172S-E220**	3-Way	9570	Advance Hold Return	Remote Motor & Valve (3,1m)	**CE**	4,72
PE172S-50-220 except has aluminium reservoir. Meets CE requirement	**PE172SM-E220**	3-Way	9570	Advance Hold Return	Remote Motor & Valve (3,1m)	**CE**	6
Best suited for crimping,punching,pressing. Thermoplastic res.Meets CE requirement	**PE172A-E220∞**	Auto./Dump Manifold	45554	Advance/Return	Remote Motor Control (3,1 m) on/off	**CE**	4,72
PE172A,except has aluminium reservoir. Meets CE requirements	**PE172AM-E220∞**	Auto./Dump Manifold	45554	Advance/Return	Remote Motor Control (3,1 m) on/off	**CE**	6
PE172-50-220, except has 9500 double-acting valve.	**PE174-50-220**	4-Way	9500	Advance Hold Return**	Remote Motor Control (3,1 m) on/off	0,37 kW, 220 V* 50/60 Hz, Single Phase	4,72
Same as PE174-50-220, except has aluminum reservoir.	**PE174M-50-220**	4-Way	9500	Advance Hold Return**	Remote Motor Control (3,1 m) on/off	0,37 kW, 220 V* 50/60 Hz, Single Phase	6
PE172-50-220, except has 9500 double-acting Valve. Meets CE requrements	**PE174-E220**	4-Way	9500	Advance Hold Return**	Remote Motor Control (3,1 m) on/off	**CE**	4,72
Same as PE174-50-220, except has aluminium Reservoir. Meets CE requirements	**PE174M-E220**	4-Way	9500	Advance Hold Return	Remote Motor Control (3,1 m) on/off	**CE**	6

* Available with 115V., 60 Hz motor (to order , remove suffix "50-220" behind pump order number).

** "Advance" position holds pressure with motor shut off.

† "Advance" position holds pressure with motor shut off. "Return" position advances cylinder with motor running and returns cylinder with motor shut off.

†† Control switch on PE17 series wired with line voltage.

∞ Not to be used for lifting.

NOTE: The remote motor control switch on 220V., 50 cycle PE17 series pumps is 24 volt (non CE).

NOTE: Usable oil is calculated with the oil fill at the recommended maximum level of 38 mm below reservoir cover plate.

‡ **Some Power Team pumps are available in special configurations not listed in this catalog. Power Team can "Assemble to Order" pumps with special seals, voltages, valves, relief valve settings, etc. For your special requirements please consult your local distributor or the Power Team factory.**

Also available in CE | E 110

CYLINDER/PUMP MATCHING Page 6
CYLINDERS Page 12
PUMP/CYLINDER SETS Page 61
PUMP ACCESSORIES Page 116
HYDRAULIC ACCESSORIES Page 120

Electric Pump
HYDRAULIC PE18 SERIES

Up to 55 Ton
295 cm³/min.
Vanguard Jr. Series®

Ideal for use with small hydraulically powered tools.

PUMPS

- Vanguard Jr.® pumps provide two-speed high performance in a light-weight, compact package.
- Gauge port provided on pump. Metal reservoir on all models.
- Equipped with a 0,37Kw (½ hp), 220 volt, 50 Hz single phase motor that starts under load, even at reduced voltage.
- Low amperage draw permits use with smaller generators and low amperage circuits.
- All pumps have a 3 m remote control (PE183C has 7,6 m remote control).
- CSA rated for intermittent duty. Noise level of 85-90 dBA.

PE182

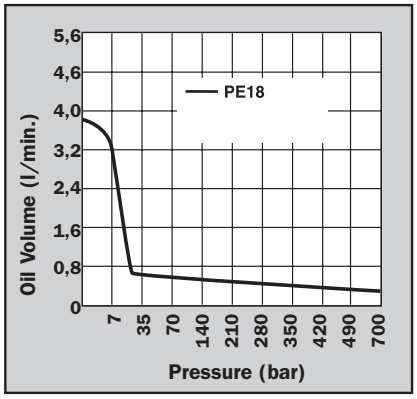

For operating hydraulic crimping, cutting or other tools:

- **No. PE183C** - For crimping or pressing applications. Has special electrical circuitry to pulse/advance, hold at full pressure, build to a predetermined pressure, release and reset circuit. Features separate emergency return switch.
- **No. PE184C** - Allows you to alternately operate a spring-return cutting and/or crimping tool without disconnecting either tool. Select port connection with manual 4-way valve, start pump with remote control hand switch and extend connected tool. When hand switch is switched to off, pump stops and automatic valve opens, allowing tool to return. In center (neutral) position, manual control valve holds tool in position at time valve is shifted.

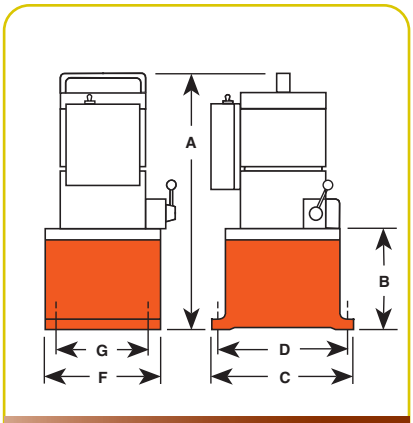

700 bar

LR19814

Pump No.	Max. Pressure Output bar	rpm	dBA at Idle and 700 bar	Amp Draw 220 V at 700 bar	Oil Del. (liters./min. @) † 0 bar	7 bar	350 bar	700 bar	A (mm)	B (mm)	C (mm)	D (mm)	F (mm)	G (mm)	Prod. Wt. with Oil (kg)
PE182	700	12.000	85/90**	4,5 Amp.	3,7	3,0	0,4	0,3	406	121	203	181	152	130	13,6
PE183	700	12.000	85/90**	4,5 Amp.	3,7	3,0	0,4	0,3	406	121	203	181	152	130	13,6
PE183A	700	12.000	85/90**	4,5 Amp.	3,7	3,0	0,4	0,3	406	121	203	181	152	130	13,6
PE184	700	12.000	85/90**	4,5 Amp.	3,7	3,0	0,4	0,3	406	121	203	181	152	130	13,6
PE183-2*	700	12.000	85/90**	4,5 Amp.	3,7	3,0	0,4	0,3	470	184	292	254	241	203	19,0
PE184-2*	700	12.000	85/90**	4,5 Amp.	3,7	3,0	0,4	0,3	470	184	292	254	241	203	19,0
PE183C ††	700	12.000	85/90**	4,5 Amp.	3,7	3,0	0,4	0,3	406	121	203	181	152	130	13,6
PE184C ††	700	12.000	85/90**	4,5 Amp.	3,7	3,0	0,4	0,3	406	121	203	181	152	130	13,6

* 9,5 l reservoir.
** Measured at 0,9 m distance, all sides.
† Typical delivery. Actual flow will vary with field conditions.
†† Special application pumps for cutting, crimping or pressing.

POWER TEAM®

PE183-2

PE183C

For use with cyl. type	Description	Order No.	Valve Type	Valve Function	Control Switch	Motor	Reservoir Usable (l)
Single-acting	Base model pump has 0,37 KW pump with 2-Way valve and 1,9 l reservoir.	**PE182-50-220**	2-Way	Advance Return†	Remote Motor Control (3,1 m) on/off	0,37 kW, 220 V** 50 Hz, A.C., Single Phase	1,7
Single-acting	PE182-50-220, except has 3-way valve.	**PE183-50-220**	3-Way	Advance Hold Return	Remote Motor Control (3,1 m) on/off	0,37 kW, 220 V** 50 Hz, A.C., Single Phase	1,7
Single-acting	PE183-50-220, except has 9,5 l reservoir.	**PE183-2-50-220**	3-Way	Advance Hold Return	Remote Control (3,1 m)	0,37 kW, 220 V** 50 Hz, A.C., Single Phase	8,4††
Single-acting	PE183-50-220, except has "dump valve".	**PE183A-50-220∞**	Auto./Dump Pump	Advance Return	Remote (3,1 m)	0,37 kW, 220 V** 50 Hz, A.C., Single Phase	1,7
Single-acting	Special crimping pump. See details on page 74.	**PE183C-50-220∞**	Special, for crimping only	Advance Hold Return	Remote Motor Control (7,6 m) on/off	0,37 kW, 220 V** 50 Hz, A.C., Single Phase	1,7
Single-acting/ double-acting	Base model pump has 0,37 KW pump for double-acting systems with 1,9 l reservoir.	**PE184-50-220**	4-Way	Advance Hold Return†	Remote Motor Control (3,1 m) on/off	0,37 kW, 220 V** 50 Hz, A.C., Single Phase	1,7
Single-acting/ double-acting	PE184, except with 9,5 l reservoir.	**PE184-2-50-220**	4-Way	Advance Hold Return†	Remote Motor Control (3,1 m) on/off	0,37 kW, 220 V** 50 Hz, A.C., Single Phase	8,4††
Single-acting/ double-acting	Special crimping pump. See details on page 74.	**PE184C-50-220***	4-Way	Advance Return	Remote Control (3,1 m) on/off	0,37 kW, 220 V** 50 Hz, A.C., Single Phase	1,7

* Also for use with special single-acting cylinder applications.

** Available with 115 Volt, 50 Hz motor (to order, remove suffix "50-220" behind pump order number). Specify voltage when ordering.

† Holds when motor is shut off and valve is in "advance" position.

†† Pumps supplied with 7,6 l oil (usable oil is 5,7 l), will hold 9,5 l when filled to within 13 mm below reservoir cover plate.

∞ Not to be used for lifting.

CYLINDER/PUMP MATCHING Page 6
CYLINDERS Page 12
PUMP/CYLINDER SETS Page 61
PUMP ACCESSORIES Page 116
HYDRAULIC ACCESSORIES Page 120

Electric Pump
PE21 SERIES

Up to 75 Ton
361 cm^3/min.
Two-Speed

Low-speed, high-torque for heavy-duty, extended-cycle operations.

PUMPS

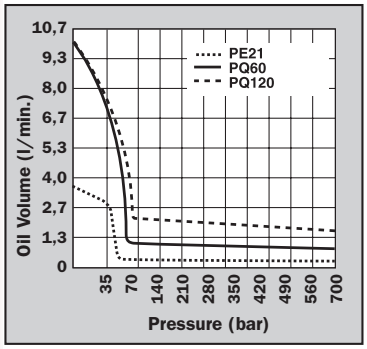

- Totally enclosed, fan cooled induction motor: 0,75Kw (1 hp), 1,725 rpm, 60 Hz, single phase. Thermal overload protection.
- Remote control, with 3,1 m cord is standard on pumps with solenoid valves. Manual valve pumps have "Stop", "Start" and "Run/Off/Pulse" switches. Pump controls are moisture and dust resistant.
- Motor drip cover with carrying handles and lifting lug.
- Low noise level of 70 dBA@ 700 bar.
- In the event of electrical interruption, pump shuts off and will not start up until operator presses the pump start button.
- 24 volt control circuits on units with remote controls provide additional user/operator safety.

PE213

PE21 series pump and RD5513 cylinder used in a special press that produces pharmaceutical-grade extracts for herbal medicines.

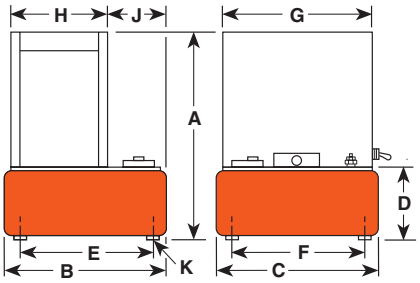

Pump No.	Max. Pressure Output bar	rpm	dBA at Idle and 700 bar	Oil Del. (l/min. at.) 7 bar	70 bar	350 bar	700 bar	A (mm)	B (mm)	C (mm)	D (mm)	E (mm)	F (mm)	G (mm)	H (mm)	J (mm)	K*** (in)	Prod. Wt. w/Oil (kg)
PE21 Series	700	1.437	70*	3,6	0,4	0,4	0,3	543	292	241	165	254	203	359	241	82,6	1/2-20 UNF	44,4†

* Measured at a 0,9 m distance, all sides.
*** For 50,8 mm dia. swivel casters, order (4) No. 10494.
† Shipping weight with manual valve; add 6,4 kg for pump with solenoid valve.

POWER TEAM

PE214

700 bar

LR19814

PE214S

For use with cyl.-type	Description	Order No.	Valve Type	Valve No.	Valve Function	Max. Amp Draw at 700 bar	Motor	Reservoir Usable (l)
Single-acting	0,75 KW pump with 9,5 l Reservoir and manual valve.	**PE213-50-220**	3-Way	9520*	Advance Hold Return	230 V - 7,5 amps	0,75 KW, 220 Volt 50 Hz, Single Phase	590
Single-acting	PE213, except has solenoid operated remote valve.	**PE213S-50-220**	3-Way	9599†	Advance Hold Return	230 V - 7,5 amps	0,75 KW, 220 Volt 50 Hz, Single Phase	590
Double-acting	0,75 KW pump with 9,5 l Reservoir and manual valve.	**PE214-50-220**	4-Way	9506*	Advance Hold Return	230 V - 7,5 amps	0,75 KW, 220 Volt 50 Hz, Single Phase	590
Double-acting	PE214, except has solenoid operated remote valve.	**PE214S-50-220**	4-Way	9512†	Advance Hold Return	230 V - 7,5 amps	0,75 KW, 220 Volt 50 Hz, Single Phase	590

* Manual valve. Pump is equipped with RUN/OFF/PULSE switch for control of motor.

† Solenoid valve. Pump is equipped with a remote control switch with 3,1 m cord.

Some Power Team pumps are available in special configurations not listed in this catalog. Power Team can "Assemble to Order" pumps with special seals, voltages, valves, relief valve settings, etc. For your special requirements please consult your local distributor or the Power Team factory.

CYLINDER/PUMP MATCHING Page 6
CYLINDERS Page 12
PUMP/CYLINDER SETS Page 61
PUMP ACCESSORIES Page 116
HYDRAULIC ACCESSORIES Page 120

Electric Pump
HYDRAULIC PED SERIES

410 cm³/min.
Two-Speed

Ideal for running multiple tools or cylinders from one power unit. Recommended for cylinders up to 75 tons.

PUMPS

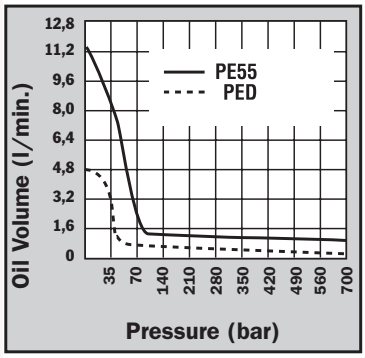

- Two-speed pumps have the same low pressure and high pressure flows from both valves.
- Flows and pressures of each pump are independent.
- Delivers 4,8 l/min. of oil at 7and 0,4 l/min. at 700 bar from each pump.
- 1,12 KW, 220 volt, 50 Hz induction motor, 3,1 m remote control and 19 l steel reservoir.
- Models available for operating single-acting or double-acting cylinders.
- Each power unit contains two separate pumps and two separate valves allowing operator to control multiple processes with one power unit.
- Both pumps on each power unit are equipped with an externally adjustable pressure relief valve.
- Not recommended for frequent starting and stopping.

PED253

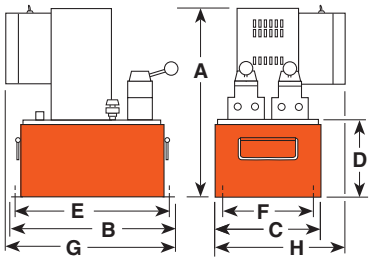

Pump No.	Max. Pressure Output bar	rpm	dBA at Idle and 700 bar	(220 V)** Amp Draw At 700 bar	Oil Del. (l/min at..) 7 bar	50 bar	350 bar	700 bar	A (mm)	B (mm)	C (mm)	D (mm)	E (mm)	F (mm)	G (mm)	H (mm)	Prod. Wt. w/Oil (kg)
PED-Series	700	2.874	87/85*	11	4,8	0,6	0,6	0,4	527	457	292	216	419	229	457	330	77

* Noise level reading (dBA) measured at a 0,9 m distance, all sides. ** Amp draw at 700 bar, 230 Volts 50 Hz is 15 Amps.

POWER TEAM

700 bar

PED254

PED254S

For use with cyl.-type	Description	Order No.	Valve Type	Valve No.	Valve Function	Control Switch ††	Motor	Reservoir Usable (l)
Single-acting	1,12 KW pump with 19 l reservoir. Valve has "Posi-Check®" feature.	**PED253-50-220**	3-Way	9520	Advance Hold Return	Remote Motor	1,12 KW, 220 VAC 50 Hz††, Single Phase	16
Double-acting	1,12 KW pump with 19 l reservoir. Valve has "Posi-Check®" feature.	**PED254-50-220**	4-Way	9506	Advance Hold Return	Remote Motor	1,12 KW, 220 VAC 50 Hz††, Single Phase	16
Double-acting	PED254, except has solenoid operated remote valve.	**PED254S-50-220**	4-Way	9513	Advance Hold Return	Remote Valve	1,12 KW, 220 VAC 50 Hz††, Single Phase	16

†† Control switch wired with line voltage. All remotes are 3,1 m long.

CYLINDER/PUMP MATCHING Page 6
CYLINDERS Page 12
PUMP/CYLINDER SETS Page 61
PUMP ACCESSORIES Page 116
HYDRAULIC ACCESSORIES Page 120

Electric Pump
HYDRAULIC PE30 SERIES

0,48 l/min.
Two-Speed
Vanguard® Series

Ideal for maintenance and construction applications

PUMPS

- Deliver a powerful punch to operate single-acting or double-acting cylinders.
- Integral roll cage protects pump from abuse.
- 0,75Kw (1 hp), single phase, permanent magnet motor.
- High performance to weight ratio.
- Starts under full load even when voltage is reduced to 50% of nominal rating.
- Quiet operation: 87 dBA @ 700 bar and 82 dBA @ 0 bar. CSA rated for intermittent duty.
- Remote controls and/or solenoid valves feature 24 volt controls.

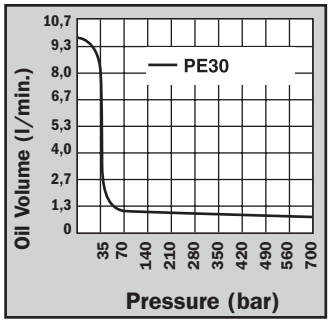

PE302S

PE30TWP
Torque Wrench
Applications
See page 171

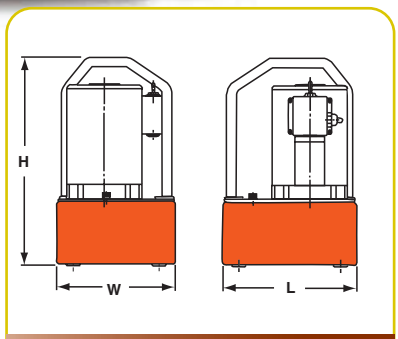

Pump No.	Max Pressure Output bar	Noise level at 700 bar (dBA)	Amp.Draw 220V at 700 bar (A)	Oil Del. (l/min at..) 7 bar	35 bar	70 bar	350 bar	700 bar	Overall Dimensions (mm)	Prod. Wt. With Oil (kg)
PE30 Series with 4,7 l res.	700	87/82	7	4,8	3,2	0,7	0,6	0,5	254L x 229W x 406H	18,6
PE30 Series with 7,6 l res.	700	87/82	7	4,8	3,2	0,7	0,6	0,5	343L x 241W x 419H	22,2

POWER TEAM

PE302

700 bar

LR19814

PE302S

For use with cyl.-type	Description	Order No.	Valve Type	Valve No.	Valve Function	Control Switch	Motor (4.000 rpm)	Reservoir Usable (l)
Single-act.	Base model 0,75 KW pump with 4,7 l Reservoir & 2 position valve.	**PE302-220∞**	3-Way, 2 Pos.	9584	Advance Return	On/Off/ Pulse Switch	0,75 KW 220/230 VAC, 50 Hz, Single Phase	4,5**
Single-act.	PE302-220, except has 6,6 l reservoir.	**PE302-2-220**	3-Way, 2 Pos.	9584	Advance Return	On/Off/ Pulse Switch	0,75 KW 220/230 VAC, 50 Hz, Single Phase	6,1***
Single-act.	PE302-220, except has remote motor control.	**PE302R-220**	3-Way, 2 Pos.	9584	Advance Return	Remote Motor Control (3,1 m)	0,75 KW 220/230 VAC, 50 Hz, Single Phase	4,5**
Single-act.	PE302R-220, except has 6,6 l reservoir.	**PE302R-2-220**	3-Way, 2 Pos.	9584	Advance Return	Remote Motor Control (3,1 m)	0,75 KW 220/230 VAC, 50 Hz, Single Phase	6,1***
Single-act.	PE302R-220, except also has solenoid operated remote valve.	**PE302S-220†**	3-Way, 2 Pos.	9570	Advance Return	Remote Motor Control (3,1 m)	0,75 KW 220/230 VAC, 50 Hz, Single Phase	4,5**
Single-act.	PE302S-220, except has 6,6 l reservoir.	**PE302S-2-220†**	3-Way, 2 Pos.	9570	Advance Return	Remote Motor Control (3,1 m)	0,75 KW 220/230 VAC, 50 Hz, Single Phase	6,1***
Single-act.	PE302-220, except has "Auto Dump" valve	**PE302A-220**	Auto Dump	9610	Automatic Pilot Operation	Remote Motor Control (3,1 m)	0,75 KW 220/230 VAC, 50 Hz, Single Phase	4,5**
Single-act.	Base model 0,75 KW pump with 4,7 l Reservoir & 3 position valve.	**PE303-220**	3-Way, 3 Pos.	9520*	Advance Hold Return	On/Off/ Pulse Switch	0,75 KW 220/230 VAC, 50 Hz, Single Phase	4,5**
Single-act.	PE303-220, except has 6,6 l reservoir.	**PE303-2-220**	3-Way, 3 Pos.	9520*	Advance Hold Return	On/Off/ Pulse Switch	0,75 KW 220/230 VAC, 50 Hz, Single Phase	6,1***
Single-act.	PE303-220, except has remote motor control.	**PE303R-220**	3-Way, 3 Pos.	9520*	Advance Hold Return	Remote Motor Control (3,1 m)	0,75 KW 220/230 VAC, 50 Hz, Single Phase	4,5**
Single-act.	PE303R, except has 6,6 l reservoir.	**PE303R-2-220**	3-Way, 3 Pos.	9520*	Advance Hold Return	Remote Motor Control (3,1 m)	0,75 KW 220/230 VAC, 50 Hz, Single Phase	6,1***
Double-act.	Base model 0,75 KW pump with 4,7 l Reservoir & 4-way valve for double-acting systems	**PE304-220**	4-Way, 3 Pos. Tandem Ctr.	9506*	Advance Hold Return	On/Off/ Pulse Switch	0,75 KW 220/230 VAC, 50 Hz, Single Phase	4,5**
Double-act.	PE304-220, except has 6,6 l reservoir.	**PE304-2-220**	4-Way, 3 Pos. Tandem Ctr.	9506*	Advance Hold Return	On/Off/ Pulse Switch	0,75 KW 220/230 VAC, 50 Hz, Single Phase	6,1***
Double-act.	PE304-220, except has remote motor control.	**PE304R-220**	4-Way, 3 Pos. Tandem Ctr.	9506*	Advance Hold Return	Remote Motor Control (3,1 m)	0,75 KW 220/230 VAC, 50 Hz, Single Phase	4,5**
Double-act.	PE304R-220, except has 6,6 l reservoir.	**PE304R-2-220**	4-Way, 3 Pos. Tandem Ctr.	9506*	Advance Hold Return	Remote Motor Control (3,1 m)	0,75 KW 220/230 VAC, 50 Hz, Single Phase	6,1***

* "Posi-Check®" valve design, "Posi-Check® " guards against pressure loss when valve is shifted from "advance" to "hold" position.

** Shipped with 3,8 l of oil (3,4 l usable).

*** Shipped with 7,6 l of oil.

∞ Not to be used for lifting. Best suited for crimping, pressing & punching applications.

CYLINDER/PUMP MATCHING Page 6
CYLINDERS Page 12
PUMP/CYLINDER SETS Page 61
PUMP ACCESSORIES Page 116
HYDRAULIC ACCESSORIES Page 120

Electric Pump
HYDRAULIC PE46 SERIES

0,6 l/min
Two-speed

Best suited for under the roof maintenance and production applications.

PUMPS

- Two-speed high performance pump.
- For use with single- or double-acting cylinders at operating pressures to 700 bar.
- Equipped with a 1.12 KW, 2.875 rpm single-phase, 50 Hz thermal protected induction motor that starts under full load. Noise level of 77-81 dBA.
- All equipped with a 3,1 m remote control except PE462S which has a 7,6 m remote control.
- 24 volt control circuit on all units with remote control.
- CSA rated for intermittent duty.

PE462A

700 bar

LR19814

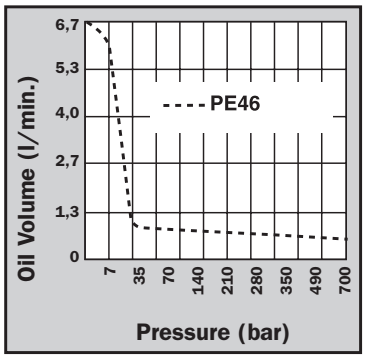

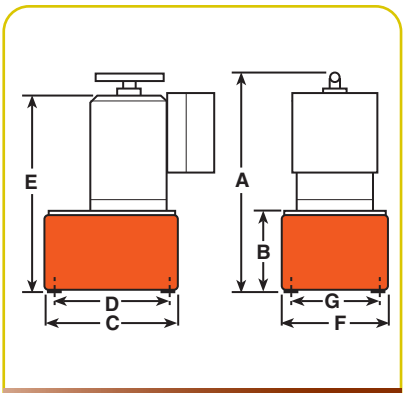

Pump No.	Max. Pressure Output bar	rpm	Noise level at Idle and 700 bar (dBA)	Amp Draw 220 V - at 700 bar (A)	Oil Del. (l/min. at..)† 0 bar	7 bar	350 bar	700 bar	A (mm)	B (mm)	C (mm)	D (mm)	E (mm)	F (mm)	G (mm)	Prod. Wt. w/Oil (kg)
PE46-Series	700	2.875	77/81	13	6,7	6,0	0,7	0,6	499	173	292	254	378	241	203	35,8
PE46-E220	700	2.875	77/81*	13	6,7	6,0	0,7	0,6	499	173	292	254	378	241	203	41,3

* Measured at 0,9 m distance, all sides.

† Typical delivery. Actual flow will vary with field conditions.

PE462S

PE464

For use with cyl.-type	Description	Order No.	Valve Type	Valve No.	Valve Function	Control Switch†††	Motor	Reservoir Usable*** (l)
Single-acting	Base model 1,12 KW pump with 9,5 l metal reservoir.	**PE462-50-220**	3-Way	**9584**	Advance Return†	Remote Motor Control (3,1 m) on/off	1,12 KW, 220 VAC* 50 Hz, Single Phase	9,4
Single-acting	PE462-50- 220, except has solenoid valve.	**PE462S-50-220**	3-Way	**9570**	Advance Return**	Remote Motor alve (7,6 m)	1,12 KW, 220 VAC* 50 Hz, Single Phase	9,4
Single-acting	PE462-50-220, except has "dump valve"	**PE462A-50-220∞**	Auto/Dump 3-Way	**9610**	Advance Return	Remote Motor Control (3,1 m) on/off	1,12 KW, 220 VAC* 50 Hz, Single Phase	9,4
Single-acting	1,12 KW pump with 9,5l metal reservoir. **Meets CE requirement**	**PE462-E220**	3-Way	**9584**	Advance Return +	Remote Motor Control (3,1 m) on/off	1,12 KW, 220 VAC* 50 Hz, Single Phase	9,4
Single-acting	PE462-50-220, except has solenoid valve. **Meets CE requirement**	**PE462S-E220**	3-Way	**9570**	Advance Return**	Remote Motor/ Valve (7,6 m)	1,12 KW, 220 VAC* 50 Hz, Single Phase	9,4
Single-acting	PE462-50-220, Except has "dump valve". **Meets CE requirement**	**PE462A-E220∞**	Auto/Dump 3-Way	**9610**	Advance Return	Remote Motor Control (3,1 m) on/off	1,12 KW, 220 VAC* 50 Hz, Single Phase	9,4
Double-acting/ multi-single-act.	PE462-50-220, except has 9500 double-acting valve.	**PE464-50-220**	4-Way	**9500**	Advance Hold Return†	Remote Motor Control (3,1 m) on/off	1,12 KW, 220 VAC* 50 Hz, Single Phase	9,4
Double-acting/ multi-single-act.	Same as PE464-50-220 **Meets CE requirement**	**PE464-E220**	4-Way	**9500**	Advance Hold Return +	Remote Motor Control (3,1 m) on/off	1,12 KW, 220 VAC* 50 Hz, Single Phase	9,4
Double-acting/ multi-single-act.	Same as PE464S-50-220 **Meets CE requirement**	**PE464S-E220**	3/4-Way	**9552**	Advance Return**	Remote Motor/ Valve (3,1m)	1,12 KW, 220 VAC* 50 Hz, Single Phase	9,4
Double-acting/ multi-single-act.	PE462S-50-220, except has 9592 double-acting valve.	**PE464S-50-220**	3/4-Way	**9552**	Advance Return**	Remote Motor/ Valve (3,1m)	1,12 KW, 220 VAC* 50 Hz, Single Phase	9,4

* Available with 115 V., 60 Hz motor (to order, remove suffix "50-220" behind pump order number). Specify voltage when ordering.

** "Advance" position holds pressure with motor shut off.

*** Usable oil is calculated with the oil fill at the recommended level of 13 mm below reservoir cover plate.

† "Advance" position holds pressure with motor shut off. "Return" position returns cylinder.

††† The remote motor control switch on PE46 series pumps is 24 volt.

∞ Not to be used for lifting. When pump is shut off, oil returns to reservoir.

CYLINDER/PUMP MATCHING Page 6
CYLINDERS Page 12
PUMP/CYLINDER SETS Page 61
PUMP ACCESSORIES Page 116
HYDRAULIC ACCESSORIES Page 120

Electric Pump
HYDRAULIC PE55 VANGUARD®

0,9 l/min
For cylinders up to 200 tons.

Heavy duty multiple-applications pump. Heavy construction and concrete stressing. Low voltage starting possible.

PUMPS

- 0,48Kw, 12,000 rpm, 220 volt, 50 Hz universal motor; draws 25 amps at full load, starts at reduced voltage. CSA rated for intermittent duty.
- 3,1 m remote motor control (except PE552S which has a 7,6 m remote motor and valve control).
- True unloading valve achieves greater pump efficiency, allowing higher flows at maximum pressure.
- Reservoirs available in sizes up to 38 l. See accessories page 119.
- Light weight and portable. Best weight to performance ratio of all Power Team pumps.
- "Assemble to Order" System: There are times when a custom pump is required. Power Team's "Assemble to Order" system allows you to choose from a wide range of pre-engineered, off-the-shelf components to build a customized pump to fit specific requirements. By selecting standard components you get a "customized" pump without "customized" prices. All pumps come fully assembled, less oil and ready for work. See pages 112-115.

PE55TWP
Torque Wrench Applications
See page 172

PE554W
The new pump; weather-resistant.

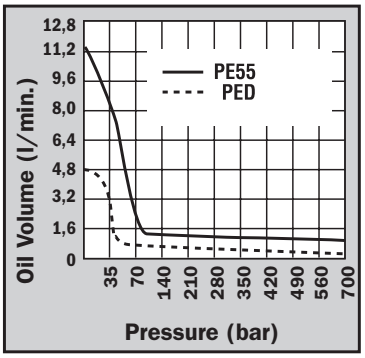

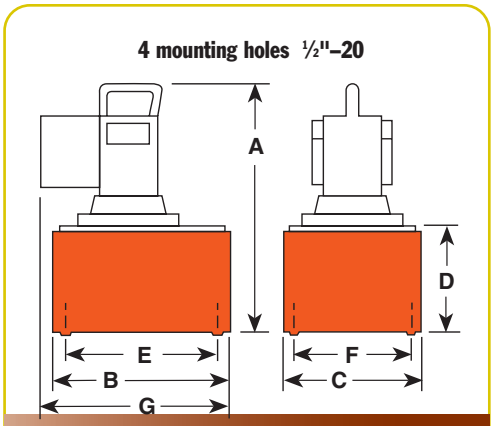

Pump No.	Max. Pressure Output bar	rpm	Noise level Idle and at 700 bar (dBA)	Amp Draw at 700 bar (220 V.)** (A)	Oil Del. (l/min at..) 0 bar	50 bar	350 bar	700 bar	A (mm)	B (mm)	C (mm)	D (mm)	E (mm)	F (mm)	G (mm)	Prod. Wt. w/Oil (kg)
PE55-Series	700	12,000	90/89*	13	11,3	7,1	1,2	0,9	464	292	241	178	254	203	356	29,4
PE55-E220									520						391	

*Noise level reading (dBA) measured at a 0,9 m distance, all sides.

** Amp draw at 700 bar, 230 Volts 60 Hz is 15 Amps.

POWER TEAM®

PE554S

LR19814

700 bar

PE554PT

PE552

For use with cyl.-type	Description	Order No.***	Reservoir Valve Type	Valve No.	Valve Function	Control Switch ††	Motor	Usable (l)
Single-acting	Base model 0,84 KW pump with 9,5 l reservoir, remote motor control & 3-way valve.	**PE552-50-220**	3-Way	9582	Advance Return**	Remote Motor	0,84 KW*, 220 VAC 50Hz, Single Phase	8,4
Single-acting	PE552-50-220, except also has solenoid operated remote valve.	**PE552S-50-220**	3-Way	9570	Advance Hold Return	Remote Motor & Valve	0,84 KW*, 220 VAC 50Hz, Single Phase	8,4
Single-acting	PE552-50-220, except has "Auto Dump" valve.	**PE552A-50-220**	Auto/Dump	9610	Advance Return	Remote Motor	0,84 KW*, 220 VAC 50Hz, Single Phase	8,4
Single-acting	0,84 KW pump with 9,5 l reservoir. Valve has "Posi-check" feature.	**PE553-50-220**	3-Way†	9520	Advance Hold Return	Remote Motor	0,84 KW*, 220 VAC 50Hz, Single Phase	8,4
Single-acting	Same as PE552-50-220, but meets also CE requirement	**PE552-E220**	3-Way	9582	Advance Return**	Remote Motor	**CE**	8,4
Single-acting	Same as PE552S-50-220, but meets also CE requirement	**PE552S-E220**	3-Way	9570	Advance Return	Remote Motor & Valve	**CE**	8,4
Single-acting	Same as PE552A-50-220, but meets also CE requirements	**PE552A-E220∞**	Auto/Dump	9610	Advance Hold Return	Remote Motor	**CE**	8,4
Single-acting	Same as PE553-50-220 but needs also CE Requirement	**PE553-E220**	3-Way	9520	Advance Hold Return	Remote Moter	0,84 KW*, 220 VAC 50Hz, Single Phase	8,4
Double-acting	Base model 0,84 KW pump with 9,5 l res. and 4-way valve for double-acting systems.	**PE554-50-220**	4-Way†	9506	Advance Hold Return	Remote Motor	0,84 KW*, 220 VAC 50Hz, Single Phase	8,4
Double-acting	Same as PE554-50-220 but needs also CE Requirement	**PE554-E220**	4-Way†	9506	Advance Hold Return	Remote Moter	0,84 KW*, 220 VAC 50Hz, Single Phase	8,4
Double-acting	PE554-50-220, except has 9500 tandem center valve.	**PE554T-50-220**	4-Way	9500	Advance Hold Return	Remote Motor	0,84 KW*, 220 VAC 50Hz, Single Phase	8,4
Double-acting	For use with single-acting Spring Seat, Stressing Jack or double-acting cylinder.	**PE554P-50-220**	4-Way	9500	Advance Hold Return	Remote Motor	0,84 KW*, 220 VAC 50Hz, Single Phase	8,4
Double-acting	For use with single- or double-acting Power Seat, Stressing Jacks ONLY.	**PE554PT-50-220**	4-Way	9628	Advance Hold Sequenced Return	Remote Motor	0,84 KW*, 220 VAC 50Hz, Single Phase	8,4
Double-acting	Pump suitable to run multiple . spring return tools	**PE554C-50-220**	4-Way	9511†††	Advance Hold Return	Remote Motor	0,84 KW*, 220 VAC 50Hz, Single Phase	8,4
Double-acting	Pump equipped with 3/4-way solenoid valve.	**PE554S-50-220**	3/4-Way	9552	Advance Hold Return	Remote Motor & Valve	0,84 KW*, 220 VAC 50Hz, Single Phase	8,4
Double-acting	Pump suitable to run multiple Spring return cylinder	**PE554C-E220**	4-Way	9511 +++	Advance Hold Return	Remote Motor	**CE**	8,4
Double-acting	Pump equipped with 3/4 -way solenoid valve	**PE554S-E220**	3/4-Way	9552	Advance Hold Return	Remote Motor & Valve	**CE**	8,4

* Pumps available with 115 volt, 50 Hz motors. (to order remove the –50-220 suffix from the order code). See "Assemble to Order" pump options on pages 102-105.

** Holds with motor shut off.

*** To order PE55 series pumps with CSA approval, add "–C" to the Order No.

† Valves have "Posi-Check®" feature.

†† Control switch wired with line voltage. All remotes are 3,1m long except for PE552S which is 7,6m long.

††† Valving allows alternate and independent operation of two different spring return tools. Valve holds pressure only while valve is in "A" or "B" port position with pump motor shut off.

∞ Not to be used for lifting.

Also available in E 110 CE

CYLINDER/PUMP MATCHING Page 6
CYLINDERS Page 12
PUMP/CYLINDER SETS Page 61
PUMP ACCESSORIES Page 116
HYDRAULIC ACCESSORIES Page 120

Electric Pump
HYDRAULIC PE60 SERIES

Post Tensioning 0,9 l/min
Two-Speed

Compact, light weight pump. Excellent choice for rugged applications and low voltage starting.

PUMPS

- Long, trouble free life in the most demanding work environments. For operating single- or double-acting cylinders, or stressing jacks.
- Powered by 0,84 KW, 220 volt, 60/50 Hz single phase motor. Starts under load, even at the reduced voltages at construction sites.
- Optional fan-driven external oil cooler includes rollover guard.
- Insulated carrying handle.
- Integral 102 mm fluid-filled pressure gauge with steel bezel complies with ASME B40.1 Grade A. With 0 to 700 bar pressure range in 7 bar increments.
- Sealed 4,34 l (usable) reservoir. Reservoir drain port is standard.
- Standard oil level sight gauge for accurate oil level monitoring.

PE604T w/cooler

- External spin-on filter removes contaminants from circulating oil to maximize pump, valve and cylinder/tool life.

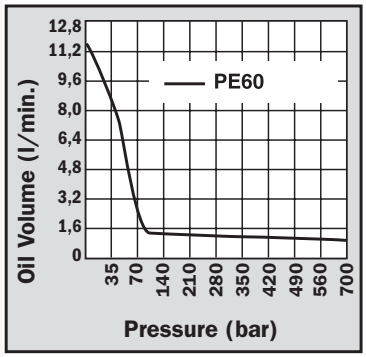

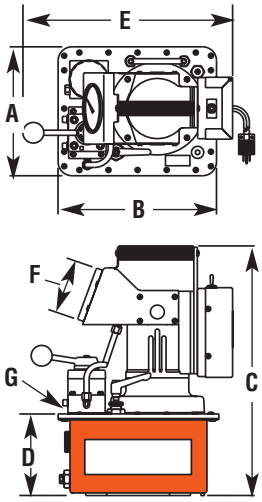

Pump No.	Max. Pressure Output bar	rpm	Noise level Idle and 700 bar (dBA)	Amp Draw at 700 bar (A)	Oil Del. (l/min at..) 0 bar	50 (50)	350 bar	700 bar	A (mm)	B (mm)	C (mm)	D (mm)	E (mm)	F (mm)	G (in)	Prod. Wt. w/Oil (kg)
PE604T -220	700	12.000	80/85	13	11,3	7,1	1,2	0,9	263,5	301,6	457,2	152,4	381	101,6	3/8 NPTF	27,2
PE604PT -220	700	12.000	80/85	13	11,3	7,1	1,2	0,9	263,5	301,6	457,2	152,4	381	101,6	3/8 NPTF	27,7

NOTE: Unloading pressure is 70 bar.
Consult factory for PE60 pump models with other control and valve options.

POWER TEAM

PE604T

700 bar

LR19814

The PE60 used for pre-stressing.

	Description	Order No.	Valve Type	Valve No.	Valve Function	Control Switch	Motor	Reservoir Usable (l)
Single-Acting, Spring Seat, Stressing Jack or Double-Acting	0,84 kW pump with 4,73 l reservoir & valve for double-acting systems.	**PE604T**	4-Way 3-position	9500	Advance Hold Return	On/Off/Pulse	0,84 kW, 220 VAC 50 Hz, Single Phase	4,34
Single-Acting or Double-Acting Power Seat, Stressing Jacks Only	PE604T, except has special valve for post tensioning application only.	**PE604PT**	4-Way 3-position	9628 Model C	Advance Hold Sequenced Return	On/Off/Pulse	0,84 kW, 220 VAC 50 Hz, Single Phase	4,34

OPTIONAL

252511: Oil cooler kit for PE604T or PE604PT, 115 VAC. Weight 2,7 kg. **252512:** Oil cooler kit for PE604T or PE604PT, 220 VAC. Weight 2,7 kg.

CYLINDER/PUMP MATCHING Page 6
CYLINDERS Page 12
PUMP/CYLINDER SETS Page 61
PUMP ACCESSORIES Page 116
HYDRAULIC ACCESSORIES Page 120

Electric Pump
HYDRAULIC PQ60 SERIES

Up to 200 ton
0,8 l/min

Pump designed specifically for heavy duty, extended cycle operation.

PUMPS

- For operating single- or double-acting cylinders.
- Metal shroud keeps dirt and moisture out of motor and electrical components.
- Electrical shut-down feature prevents unintentional restarting of motor following an electrical service interruption.
- Internal relief valve limits pressure to 700 bar. External relief valve is adjustable from 70 to 700 bar.
- Pumps operate below maximum OSHA noise limitation (74-76 dBA).
- Start and operate under full load, even with voltage reduced 10%.

PQ603

700 bar

LR19814

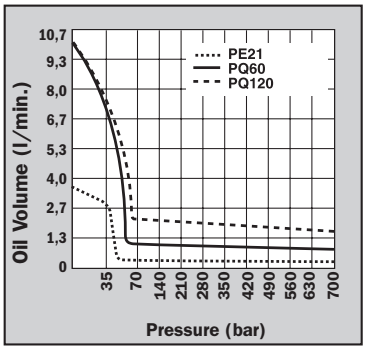

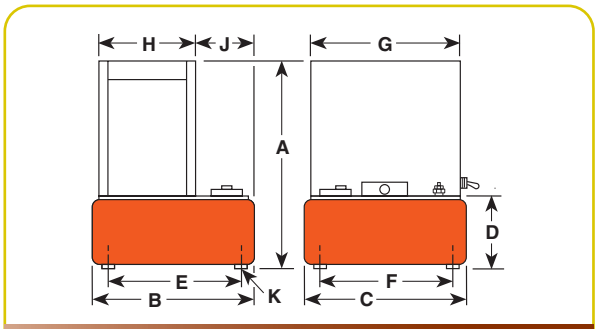

Pump No.	Max. Pressure Output bar	rpm	Noise level at Idle and 700 bar (dBA)	Amp Draw at 700 bar (A)	Oil Del. (l/min at..) 7 bar	70 bar	350 bar	700 bar	A (mm)	B (mm)	C (mm)	D (mm)	E (mm)	F (mm)	G (mm)	H (mm)	J (mm)	K*** (in)	Prod. Wt. w/Oil (kg)
PQ60 Series	700	1.437	74/76*	See Chart (following page)	9,7	0,9	0,9	0,8	638	362	394	184	308	338	373	237	122,2	½–20 UNF	76,6**

* Measured at a 0,9 m distance, all sides.

** Total weight with oil and 3-way solenoid valve.
Subtract 4,5 kg to obtain weight of pump with manual valve.

*** For 50,8 mm dia. swivel casters, order (4) No. 10494.

POWER TEAM

PQ604

PQ604S

Hydraulic Machine Press Operation.

For use with Cyl. Type	Description	Order No.	Valve Type	Valve No.	Valve Function	Max. Amp Draw at 700 bar (A)	Motor	Reservoir Usable (l)
Single-Acting	1,49 KW pump with 21,6 l reservoir and manual valve,	**PQ603-50-220**	3-Way	9520*	Advance Hold Return	115V - 22 amps 230V - 11 amps	1,49 KW, 220 Volt 50 Hz, Single	20
Single-Acting	PQ603-50-220, except has solenoid operated remote valve.	**PQ603S-50-220**	3-Way	9599†	Advance Hold Return	115V - 22 amps 230V - 11 amps	1,49 KW, 220 Volt 50 Hz, Single	20
Double-Acting	1,49 KW pump with 21,6 l reservoir and manual valve.	**PQ604-50-220**	4-Way	9506*	Advance Hold Return	115V - 22 amps 230V - 11 amps	1,49 KW, 220 Volt 50 Hz, Single	20
Double-Acting	PQ604-50-220, except has solenoid operated remote valve.	**PQ604S-50-220**	4-Way	9512†	Advance Hold Return	115V - 22 amps 230V - 11 amps	1,49 KW, 220 Volt 50 Hz, Single	20

* Manual valve. Pump is equipped with RUN/OFF/PULSE switch for control of motor.

† Solenoid valve. Pump is equipped with a remote control switch with 3,1 m cord.

‡ Some Power Team pumps are available in special configurations not listed in this catalog. Power Team can "Assemble to Order" pumps with special seals, voltages, valves, relief valve settings, etc. For your special requirements please consult your local distributor or the Power Team factory.

CYLINDER/PUMP MATCHING Page 6
CYLINDERS Page 12
PUMP/CYLINDER SETS Page 61
PUMP ACCESSORIES Page 116
HYDRAULIC ACCESSORIES Page 120

Electric Pump
HYDRAULIC PQ120 SERIES

Up to 400 Ton
1,6 l/min

Low speed, high torque pump designed specifically for heavy duty, extended cycle operation. Ideal for press operation.

PUMPS

- Start and operate under full load, even with voltage reduced 10%.
- Electrical shut-down feature prevents unintentional restarting of motor following an electrical service interruption.
- Internal relief valve limits pressure to 700 bar. External relief valve is adjustable from 70 to 700 bar.
- Pump prewired at factory with a 2,24 KW, 380 volt, 50 Hz. 3 Phase motor. Other electrical configurations are available. See ordering information on the following page.
- 24 volt control circuits on units with remote controls for added user/operator safety.
- 2,24 KW(3 phase) motor with thermal overload protection. Motor starter and heater element supplied as standard equipment; no hidden charges!
- Metal shroud keeps dirt and moisture out of motor and electrical components.
- Pumps operate below maximum OSHA noise limitation.

PQ1203

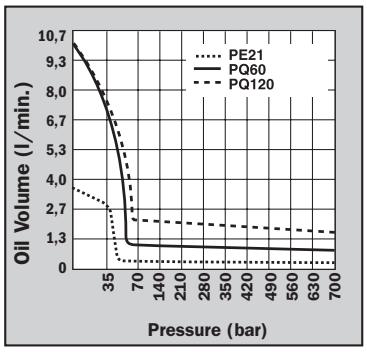

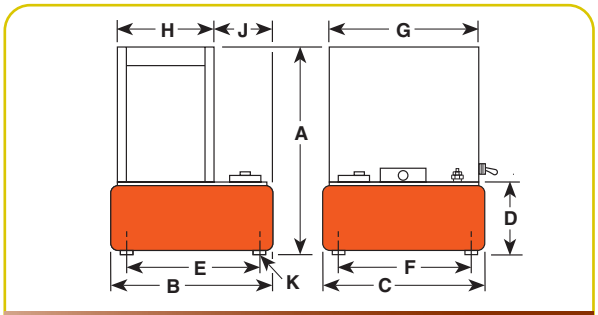

Pump No.	Max. Pressure Output bar	rpm	Noise level at Idle and 700 bar (dBA)	Amp Draw at 700 bar (A)	Oil Del. (l/min at..) 7 bar	70 bar	350 bar	700 bar	A (mm)	B (mm)	C (mm)	D (mm)	E (mm)	F (mm)	G (mm)	H (mm)	J (mm)	K*** (in)	Prod. Wt. w/Oil (kg)
PQ120-Series	700	1.437	73/78*	See Chart Above	9,7	2,1	1,7	1,6	638	362	394	184	308	338	373	237	122,2	½–20 UNF	74,3**

* Measured at a 0,9 m distance, all sides.
** Total weight with oil and 3-way solenoid valve.
Subtract 4,5 kg to obtain weight of pump with manual valve.

*** For 50,8 mm dia. swivel casters, order (4) No. 10494.

POWER TEAM

PQ1204

PQ1204S

700 bar

LR19814

For use with cyl.-type	Description	Order No.	Valve Type	Valve No.	Valve Function	Motor	Reservoir Usable (l)
Single-acting	2,24 KW pump with 21,6 l reservoir and manual valve.	**PQ1203-E380**	3-Way	9520*	Advance Hold Return	2,24 KW, 400 Volt 50 Hz, 3 Phase	20
Single-acting	PQ1203-50-380, except has solenoid operated remote valve.	**PQ1203S-E380**	3-Way	9599†	Advance Hold Return	2,24 KW, 400 Volt 50 Hz, 3 Phase	20
Double-acting	2,24 KW pump with 21,6 l reservoir and manual valve.	**PQ1204-E380**	4-Way	9506*	Advance Hold Return	2,24 KW, 400 Volt 50 Hz, 3 Phase	20
Double-acting	PQ1204-50-380, except has solenoid operated remote valve.	**PQ1204S-E380**	4-Way	9512†	Advance Hold Return	2,24 KW, 400 Volt 50 Hz, 3 Phase	20

* Manual valve. Pump is equipped with RUN/OFF/PULSE switch for control of motor.

† Solenoid valve. Pump is equipped with a remote control switch with 3,1 m cord.

‡ Some Power Team pumps are available in special configurations not listed in this catalog. Power Team can "Assemble to Order" pumps with special seals, voltages, valves, relief valve settings, etc. For your special requirements please consult your local distributor or the Power Team factory.

CYLINDER/PUMP MATCHING Page 6
CYLINDERS Page 12
PUMP/CYLINDER SETS Page 61
PUMP ACCESSORIES Page 116
HYDRAULIC ACCESSORIES Page 120

Electric Pump
HYDRAULIC PE400 SERIES

Up to 1,000 Ton
5,6 l/min

High tonnage double-acting cylinders, Single or multiple cylinder applications. Up to 1,000 Tons

PUMPS

- Two-speed high output pump delivers up to 16 l/min of oil.
- Low noise level of 73-80 dBA.
- Integral electrical shut-down feature prevents unintentional restarting of motor following an electrical service interruption. Over-current protection prevents damage to motor as a result of overheating.
- "Stop" and "Start" control buttons are 24 volt. PE4004 has a 4-way/3-position manual valve. The PE4004S has a 4-way/3-position solenoid valve with a 24 volt remote hand switch.
- External pressure relief valve is adjustable from 100 to 700 bar.
- Heavy duty 50,8 mm dia. casters assure easy maneuvering.
- 75,7 l (62,8 l usable) reservoir has a low oil level sight gauge.
- Powered by a dual voltage 7,46 KW, 3 phase, 1,437 rpm motor.
- 3 phase motor has all the electrical components necessary to operate the pump.The customer has no hidden charges when making purchase.
- Deliver 16 l/min. of oil at 15 bar, 5,6 l/min. of oil at 700 bar.

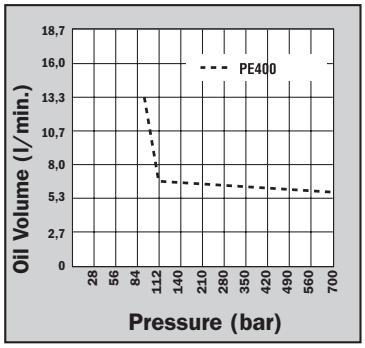

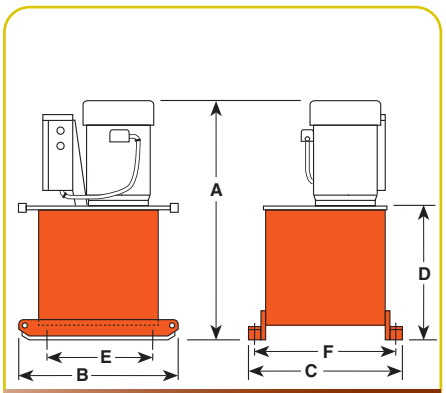

Pump No.	Max. Pressure Output bar	rpm	Noise level at Idle and 700 bar (dBA)	Amp Draw at 700 bar (A)	Oil Del. (l/min at..) 15 bar	90 bar	350 bar	700 bar	A* (mm)	B (mm)	C (mm)	D (mm)	E Caster Mfg. (mm)	F Caster Mfg. (mm)	Prod. Wt. w/Oil (kg)
PE4004-50-380	700	1.437	73/80	6	16	14	6	5,6	924	635	610	540	394	546	223
PE4004S-50-380	700	1.437	73/80	6	16	14	6	5,6	924	635	610	540	394	546	229

* Add 127 mm and 3,6 kg when casters are mounted. (Units are supplied with four 102 mm dia. swivel casters.)

POWER TEAM

PE4004S pump and RD3006 cylinder used in a special press which repairs damaged chain links for the shipping industry.

PE4004S

700 bar

PUMPS

For use with cyl.-type	Description	Order No.	Valve Type	Valve No.	Valve Function	Motor††	Reservoir Usable (l)
Double-acting	7,46 KW pump with 75,5 l reservoir and manual valve.	**PE4004-E380**	4-Way	9506	Advance Hold Return	7,46 KW, 400 volt 50 Hz, 3 Phase	62,8†
Double-acting	PE4004, except has solenoid operated remote valve.	**PE4004S-E380**	4-Way	9512**	Advance Hold Return	7,46 KW, 400 volt 50 Hz, 3 Phase	62,8†

** Solenoid valve with remote control.

† Usable oil is calculated with oil fill at recommended level at 57 mm below cover plate.

†† PE400 series available in 220/380V, 50Hz and 460V, 50Hz. Please specify when ordering. Example: PE4004-50-380 or for 460 V PE4004-460.

NOTE: Valves for spring return cylinders are available upon request. Consult the factory.

CYLINDER/PUMP MATCHING Page 6
CYLINDERS Page 12
PUMP/CYLINDER SETS Page 61
PUMP ACCESSORIES Page 116
HYDRAULIC ACCESSORIES Page 120

Crimping Pump
ELECTRIC HYDRAULIC PE-NUT

0,49 l/min
Two-Speed

Extremely durable yet lightweight and operate under low-line voltage conditions.

PUMPS

PE-NUT PUMP – 115/230V

- 0,46 KW universal electric motor (50 cycle)
- Two-stage pump for rapid ram advance
- Operational under low-line voltage conditions
- Optional operating pressures available; consult Power Team for details
- Designed for use with spring-returned remote tools
- High-pressure safety relief valve
- Remote hand control with 3,1 m cord
- Carrying handle
- Factory filled oil reservoir
- Pressure matched quick-coupler supplied
- Optional carrying case
- Two-stage pumping system
- Unique, intermittent duty pump
- Piston-type high-pressure pump supercharged by a low-pressure pump.

CAUTION: DESIGNED FOR CRIMPING APPLICATIONS ONLY! This system should not be used for lifting.

Order No.	Oil Delivery (l/min.)	Oil Reservoir qt. (l)	Usable Oil qt. (l)	Overall Width (mm)	Overall Length (mm)	Overall Depth (mm)	Pump Weight w/Oil (kg)
PE-NUT	2,62 at 7 bar	6	2,8	165	365	210	12,6
PE-NUTC*	0,49 at 700 bar						

*Includes Case

Electrical Data	
Electric Motor	Electrical Control
0,46 KW, 10,000 rpm 115V or 230V AC, 50 Hz 11 amp current draw (115V at 700 bar)	Remote control with 3,1 m cord

POWER TEAM

Crimping Pump
2,1 l/min
Two-Speed

Two-stage pump for rapid advance

GASOLINE POWER PUMPS

PG1203-CP
- 4,5 Kw Briggs & Stratton engine
- Manual control valve
- High-pressure safety relief valve
- Protective roll cage
- For use with single acting tools

PG1203/4S-CP

- 4,1 Kw Honda OHV-type engine
- Remote hand control with 3,1 m cord
- Two-stage pump for rapid advance
- High-pressure safety relief valve
- Protective roll cage
- For use with either single or double acting tools

CAUTION: DESIGNED FOR CRIMPING APPLICATIONS ONLY! This system should not be used for lifting.

Order No.	Oil Delivery (l/min.)	Oil Reservoir (l)	Usable Oil (l)	Overall Width (mm)	Overall Length (mm)	Overall Height (mm)	Pump Weight w/Oil (kg)
PG1203-CP	8 at 7 bar	11,3	7	502	552	622	25
PG1203/4S-CP	2,1 at 700 bar						

CYLINDER/PUMP MATCHING Page 6
CYLINDERS Page 12
PUMP/CYLINDER SETS Page 61
PUMP ACCESSORIES Page 116
HYDRAULIC ACCESSORIES Page 120

Gasoline Pump
HYDRAULIC PG30/55 SERIES

0,5 - 0,9 l/min
Gasoline driven

Gasoline power supply ideal for remote locations. PG30 series for to 75 ton cylinders. PG55 series for up to 150 ton cylinders.

PUMPS

- A logical choice at work sites where electricity or compressed air are unavailable. For single- or double-acting cylinders at operating pressures to 700 bar.
- All gasoline engine/hydraulic pumps feature "Posi-Check®" valve to guard against pressure loss when valve is shifted from "advance" to "hold".

PG303

PG303 and PG304

- Powered by a 2-cycle, 1,5 kW Tecumseh engine giving it the lowest weight to horsepower ratio of all gasoline driven pumps. Has an aluminum reservoir with 6 l of usable oil.
- Has same basic pump as PE30 series electric operated pumps.
- PG30 series pumps are equipped with roll cages to protect pump from damage.
- PG30 series pumps weigh in at only 14,5 kg with oil.
- PG303 is for single-acting cylinders, has a 9520 valve with separate internal return line; allows oil from running pump to return to reservoir, independently of cylinder return oil, when valve is in "return" position.
- PG304 is for double-acting cylinders, has a 9506 4-way (tandem center) valve.

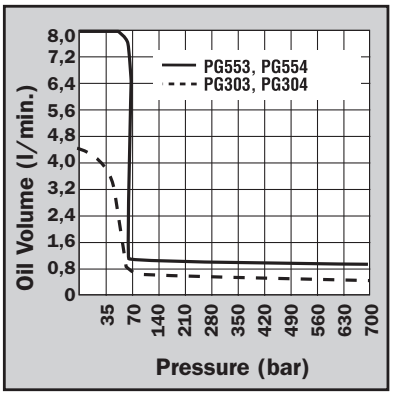

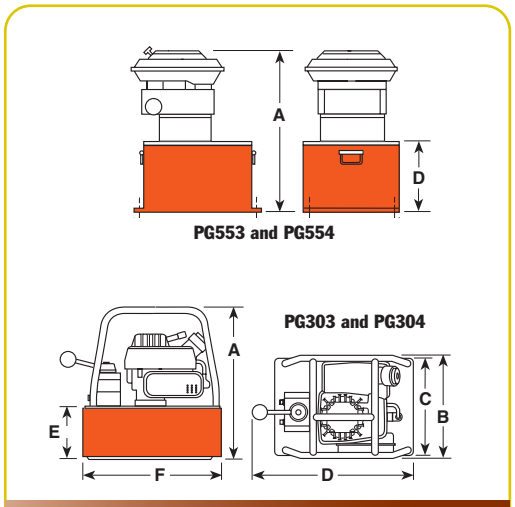

Pump No.	Max. Pressure Output bar	rpm	Oil Del. (l/min at...) 7 bar	0 bar	350 bar	700 bar	A (mm)	B (mm)	C (mm)	D (mm)	E (mm)	F (mm)	Prod. Wt. w/Oil (kg)
PG303, PG304	700	6.000	4,4*	0,6	0,6	0,5	378	264	241	406	130	343	14,5
PG553, PG554	700	3.600	7,7	1,2	1,1	0,9	559	457	318	219	422	229	54,4

* First stage oil delivery from 0-28 bar at 3,7 l/min minimum.

POWER TEAM®

PG554

700 bar

PG553 and PG554

- 4,5 Kw Intek "Diamond Edge" 4-cycle, by Briggs & Stratton 19 l reservoir.
- Same basic pump as PE55 series electrical Vanguard® pumps.
- PG553 has a 9520 3-way valve for single-acting cylinders.
- PG554 has a 9506 4-way valve for double-acting cylinders.

Gasoline Powered Hydraulic Pumps like this PG303 help provide hydraulic force at remote locations.

For use with cyl.-type	Description	Order No.	Valve Type	Valve No.	Valve Function	Reservoir Usable (l)	Kw	Cycle
Single-acting	1,5 Kw pump with 7,6 l reservoir and single-acting valve.	**PG303**	3-Way	9520	Advance Hold Return	6	1,5	2
Single-acting	4,5 Kw pump with 21,6 l Reservoir and single-acting valve.	**PG553**	3-Way	9520	Advance Hold Return	20,8**	4,5	4
Double-acting	PG303, except has double-acting valve.	**PG304**	4-Way	9506	Advance Hold Return	6	1,5	2
Double-acting	PG553, except has double-acting valve.	**PG554**	4-Way	9506	Advance Hold Return	20,8**	4,5	4

** Usable oil is calculated with oil fill at recommended level at 13 mm below cover plate.

CYLINDER/PUMP MATCHING Page 6
CYLINDERS Page 12
PUMP/CYLINDER SETS Page 61
PUMP ACCESSORIES Page 116
HYDRAULIC ACCESSORIES Page 120

Gasoline Pump
PG120-PG400 SERIES

2,1 - 6,4 l/min
Max.output gasoline powered pumps.

Large reservoir capacity roll cage equipped. PG120 for up to 300 ton cylinders. PG400 for up to 1,000 ton cylinders.

PUMPS

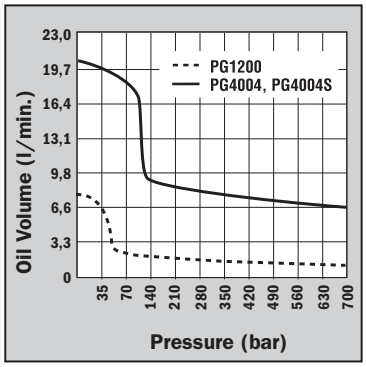

- Two-speed high performance pumps ideal for construction, structure moving and rigging applications.
- A logical choice at work sites where electricity or compressed air are unavailable. For single- or double-acting cylinders at operating pressures to 700 bar.
- All gasoline engine/hydraulic pumps feature "Posi-Check® " valve to guard against pressure loss when valve is shifted from "advance" to "hold".
- PG1200 Series pumps powered by a Honda 4-cycle, 5.5 hp engine with automatic decompression and electronic ignition. Deliver over 2,1 l/min at 700 bar.
- A 19 liter reservoir means adequate capacity for multi-cylinder applications. Dual element air cleaner protects engine from dusty environments.

700 bar

PG4004S

- Heavy duty "roll cage" provides pick-up points for lifting. Horizontal bars on PG1203, PG1204 and PG1204S protect unit, provide hand holds for carrying.
- Rubber anti-skid insulation on bottom of reservoir resists skidding and dampens vibration. PG1200M-4 and PG1200M-4D include a pump cart with 305 mm wheels.
- Adjustable external pressure regulator.

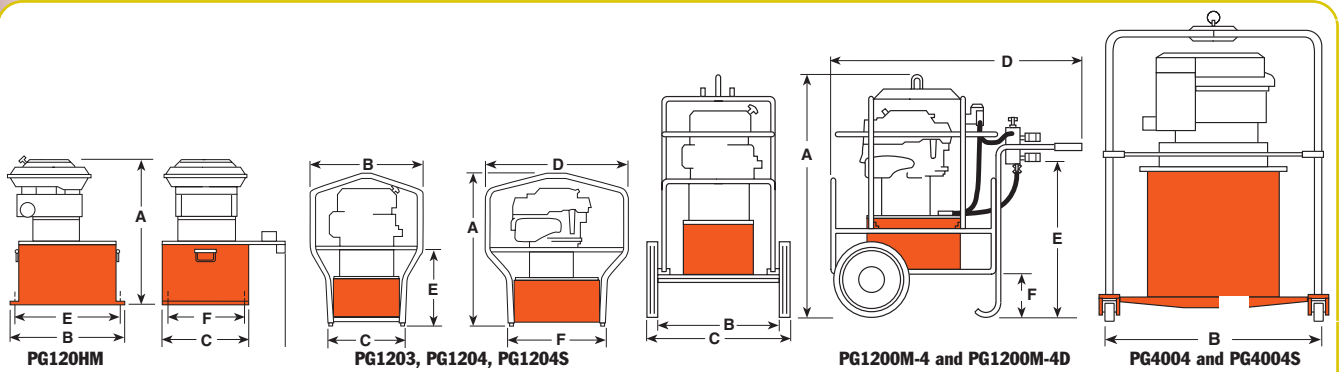

PG120HM | PG1203, PG1204, PG1204S | PG1200M-4 and PG1200M-4D | PG4004 and PG4004S

Pump No.	Max. Pressure Output bar	rpm	Oil Del. (l/min @) 7 bar	70 bar	350 bar	700 bar	A (mm)	B (mm)	C (mm)	D (mm)	E (mm)	F (mm)	Prod. Wt. w/Oil (kg)
PG120HM	700	3,600	7,7	2,8	2,4	2,1	584	394	362	483	338	308	68
PG1203	700	3,600	7,7	2,8	2,4	2,1	708	514	362	667	343	464	70
PG1204	700	3,600	7,7	2,8	2,4	2,1	708	514	362	667	343	464	70
PG1204S	700	3,600	7,7	2,8	2,4	2,1	708	514	362	667	343	464	73
PG1200M-4	700	3,600	7,7	2,8	2,4	2,1	1070	457	635	1080	667	184	118
PG1200M-4D	700	3,600	7,7	2,8	2,4	2,1	1070	457	635	1080	667	184	127
PG4004	700	3,600	19,8	17,9	7,6	6,4	1276	1321	1321	—	—	—	197
PG4004S	700	3,600	19,8	17,9	7,6	6,4	1276	1321	1321	—	—	—	200

POWER TEAM®

PG1204S

PG1200M-4D

PG1200M-4

- For single-acting cylinders. Has 9520 3-way/3-position (tandem center) valve, 9596 load lowering valve and 9644 4-port manifold with individual needle valves at each port.
- Has a 9796 coupler and 9797 dust cap at each port. Valving permits precise individual control of up to four cylinders.
- A 9052 heavy duty, fluid filled pressure gauge (0-700 bar) is included.

PG1200M-4D

- For single- or double-acting cylinders with precise individual control of up to four cylinders possible.
- Equipped same as PG1200M-4, except has 9506 4-way/3-position (tandem center) valve, and second 4-port manifold without needle valves mounted beneath 9644 manifold for operating double-acting cylinders.

PG400 Series Maximum output Hydraulic Power Package

- Ideal for single or multiple cylinder applications. Has a 4-cycle, 15 kW Honda engine and 76 l reservoir (63 l usable) with low oil level sight gauge.
- Steel "roll cage" protects pump, has a lifting hook; 102 mm dia. swivel casters provide mobility.
- Delivers 6,4 l/min of oil at maximum operating pressure.
- Has a 9506 4-way valve. On/off switch and speed control are protected by a panel. Sturdy molded case protects battery (not included).

For use with cyl.-type	Description	Order No.	Valve Type	Valve No.	Valve Function	Reservoir Usable (l)	Kw	Cycle
Single-acting	Base model 4,1 Kw gasoline pump with 22 l reservoir.	**PG1203**	3-Way	9520	Advance Hold Return	20,8	4,1	4
Single-acting	PG1203 with cart, rollcage, load lowering valve, 4 port manifold & gauge.	**PG1200M-4**	3-Way Manifold	9520 9644	Advance Hold Return**	20,8	4,1	4
Single-acting/ double-acting	PG1200M-4D, except without "Roll Cage" and cart. Ideal for house moving industry.	**PG120HM**	4-Way Manifold	9506 9642	Advance Hold Return**	20,8	4,1	4
Double-acting	Base model 4,1 Kw gasoline pump, with 22 l reservoir and double-acting valve.	**PG1204**	4-Way	9506	Advance Hold Return	20,8	4,1	4
Double-acting	PG1204, except has roll cage, cart, solenoid valve and 7,6 m cord.	**PG1204S**	4-Way Solenoid***	9516	Advance Hold Return	20,8	4,1	4
Double-acting	PG1200M-4, except for double-acting systems.	**PG1200M-4D**	4-Way Manifold	9506 9644	Advance Hold Return**	20,8	4,1	4
Double-acting	Base model 15 Kw pump with 76 l reservoir.	**PG4004**	4-Way	9506	Advance Hold Return	62,8*	15	4
Double-acting	PG4004, except has solenoid operated remote valve.	**PG4004S**	4-Way Solenoid***	9516	Advance Hold Return	62,8*	15	4

* Usable oil is calculated with oil fill at recommended level at 57 mm below cover plate.

** Control up to 4 cylinders independently.

*** Has 7,6 m remote control cord.

CYLINDER/PUMP MATCHING Page 6
CYLINDERS Page 12
PUMP/CYLINDER SETS Page 61
PUMP ACCESSORIES Page 116
HYDRAULIC ACCESSORIES Page 120

Intensifier
HYDRAULIC

Pressure ratio 5:1

Converts low-pressure portable hydraulic pumps or on-board hydraulic systems, into high pressure power sources.

PUMPS

- Applications include utilities, railroads, construction, riggers and others.
- Operates single- or double-acting cylinders, jacks, and tools such as crimpers, spreaders, cable cutters, or tire tools.
- May be used to operate two separate, single-acting tools (with integral valves) independently, without need for additional manifold.
- Compact and rugged for use inside a utility vehicle aerial bucket or stowing in a vehicle.
- Control valve included. Other Power Team valves available as an option to suit your specific application, if needed; consult factory.
- No reservoir level to maintain; uses low pressure system as oil supply.
- Has 3/8" NPTF ports; compatible with standard fittings for low and high pressure systems.

HB443

700 bar

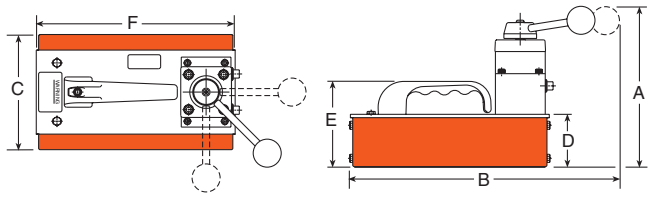

Pump No.	Output Flow at 700 bar	A (mm)	B (mm)	C (mm)	D (mm)	E (mm)	F (mm)	Prod. Wt. (kg)
HB44-Series	0,7 l/min.	210	368	156	70	114	267	7,2

For use with Cyl. Type	Description	Order No.	Valve Type	Valve No.	Output Flow Valve Function	Input Flow Range (l/min)	Input Flow Pressure (bar)	Output Flow Range (l/min)
Single-Acting	Hydraulic intensifier for single-acting systems	**HB443**	3-Way 3-Position	9520*	Advance Hold Return	0 -38	20 - 138	0 - 9,5
Single-Acting/ Double-Acting	Hydraulic intensifier for double-acting systems	**HB444**	4-Way 3-Position	9506*	Advance Hold Return	0 -38	20 - 138	0 - 9,5
Double-Acting NEW	Hydraulic intensifier for double-acting torque wrench tools	**HB445-RR**	4-Way 3-Position	–	Advance Hold Return	0 -38	20 - 138	0 - 9,5

† For maximum efficiency, recommended input flow is 19 l/min at a maximum pressure of 140 bar. Higher flows and/or pressures must be compensated for at the system pump (e.g., relief valve, variable flow devices, etc.).

* "Posi-Check®" valve design, "Posi-Check®" guards against pressure loss when valve is shifted from "advance" position to "hold" position.

Booster Pump
25 SERIES

0,82 l/min

- Designed to intensify low-pressure systems to 700 bar
- Two-speed pump for rapid ram advance
- Designed to operate with external hydraulic oil systems
- All position mounting operation
- Design permits operation on open- or closed-center system
- Dual output pressure port selector valve (DUP models)
- High-pressure safety relief valve
- Carrying handle for portability
- Pressure matched quick-couplers supplied

- The 25 Series Boosters represent an innovative concept, providing pressures up to 700 bar for the operation of high-pressure tools.
- Oil from an external source, such as a bucket truck or tractor, is intensified to 700 bar maximum.
- Low pressure from the source is bypassed through the booster for rapid ram advance.
- These compact, lightweight boosters do not have reservoirs. The units can be operated in any position on either open- or closed-center (accumulator) hydraulic systems.

25 Series

Order No.	Output Pressure (bar)	Input Pressure (bar)	Input Flow Rate (min-max) - (l/min)	Overall Width (mm)	Overall Length (mm)	Overall Height (mm)	Booster Weight (kg)
25-OM-DUP[10/10]-C 25-OA-DUP[10/10]-C	700	70-140	10 - 21*	292	205	216	16
25-OM-[10]-C 25-OA-[10]-C	700	70-140	10 - 21*	298	205	216	15

Order No.	Oil Delivery Low Pressure	Oil Delivery High Pressure
25-OM-DUP[10/10]-C 25-OA-DUP[10/10]-C 25-OM-[10]-C 25-OA-[10]-C	10 – 21 l/min.	0,8 l/min.

* Flow rates based on 21 l/min at 70 bar with oil of 180 SSU at 37,7°C.

PUMP ACCESSORIES Page 116
HYDRAULIC ACCESSORIES Page 120

Assemble to Order System

CUSTOM BUILT HYDRAULIC PUMP

Choose your basic pump, make your selections, and we will assemble, test and ship your pump.

PUMPS

700 bar

ORDER A "CUSTOM BUILT" HYDRAULIC PUMP

"Assemble to Order" means you can choose a basic pump with gas, air or electric motor. Then select the proper valve, gauge, pressure control, motor control and reservoir. You get a two-stage pump that gives high oil volume for fast cylinder approach (and return with double-acting cylinders) in the first stage and high pressure in the second stage.

1 0,83 KW UNIVERSAL MOTOR

These motors start under full load and are suitable for operation up to 350 or 700 bar. The motor is 0,83 KW, 12,000 rpm, 115 or 230 volt, 50 cycle A.C. single phase (25 amp draw at 115V.). With proper valve they can be used with single- or double-acting cylinders. Remote control available.

2 1,1 KW JET MOTOR, SINGLE & THREE-PHASE

Feature low noise level, moderate speed for long service and are ideal for fixed applications. Motor is 1,1 KW, 3.450 rpm, 115 or 230 volt, 50 cycle, A.C. single phase with thermal overload switch. Can be used with single- or double-acting cylinders and equipped with remote control. Also available in 230/460 volt, three-phase (specify).

NOTE: These do not start under full load unless valve is in "neutral" (requires open or tandem center valve) and are not recommended for frequent starting and stopping.

3 2,2 KW JET MOTOR, THREE-PHASE

Gives low noise level and long life due to its moderate operating speed. Ideal for fixed installations. Consists of basic 700 bar pump, jet pump motor: 2,2 KW, 3.450 rpm, 230/460 volt, 50 cycle. A.C. three-phase, with thermal overload switch. Equipped with internal and external relief valve. Will start under load.

4 2,3 KW AIR MOTOR

This pump is ideal for use where electricity is unavailable or cannot be used. The 350 or 700 bar pump has a 2,3 KW air driven motor at 3.000 rpm (optimum performance based on 6 bar air pressure and 1165 l/min 1419 l/min at the pump). You can drive single- or double- acting cylinders with the correct valve.

NOTE: 6 bar air supply required to start under full load.

5 GASOLINE ENGINE

This version is perfect when electricity and air are unavailable. It is capable of continuous operation at full pressure. Consists of basic 700 bar pump, 4-cycle Briggs & Stratton "Diamond Edge" gasoline engine, developing 4,5 KW. As with all these pumps, this unit can be valved for use with either single- or double-acting cylinders.

1

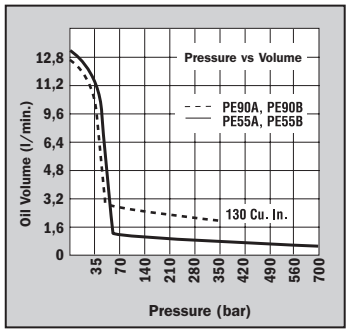

dBA @ idle and 700 bar- 90/95
dBA @ idle and 350 bar - 90/95

2

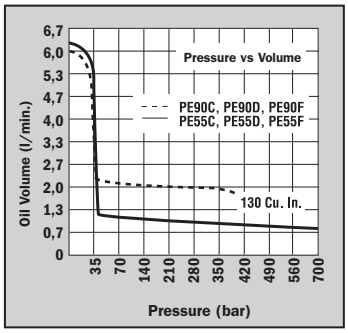

dBA @ idle and 700 bar - 80/85

3

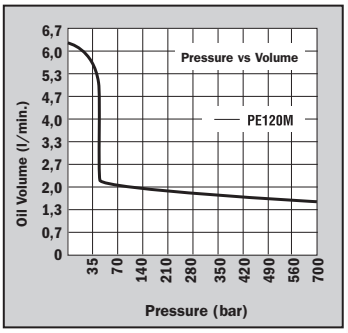

dBA @ idle and 700 bar - 80/85

4

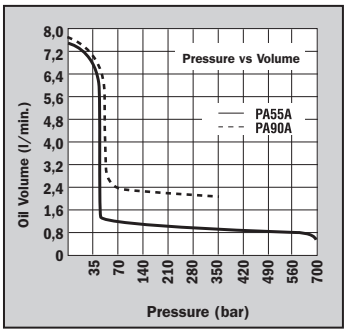

dBA @ idle and 700 bar - 83/88
dBA @ idle and 350 bar - 83/88

5

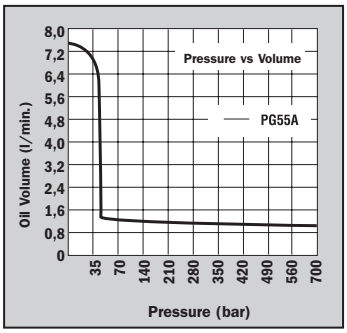

"ASSEMBLE TO ORDER" SYSTEM
HOW TO ORDER YOUR "CUSTOM" HYDRAULIC PUMP. . .

You can choose from pre-engineered, off-the-shelf components to customize your pump. All the components are listed in table form, with key letters or numbers on pages 114-115. Complete instructions guide you through so you can determine what is needed to complete a pump assembly. Shown below is an example of a custom-built pump.

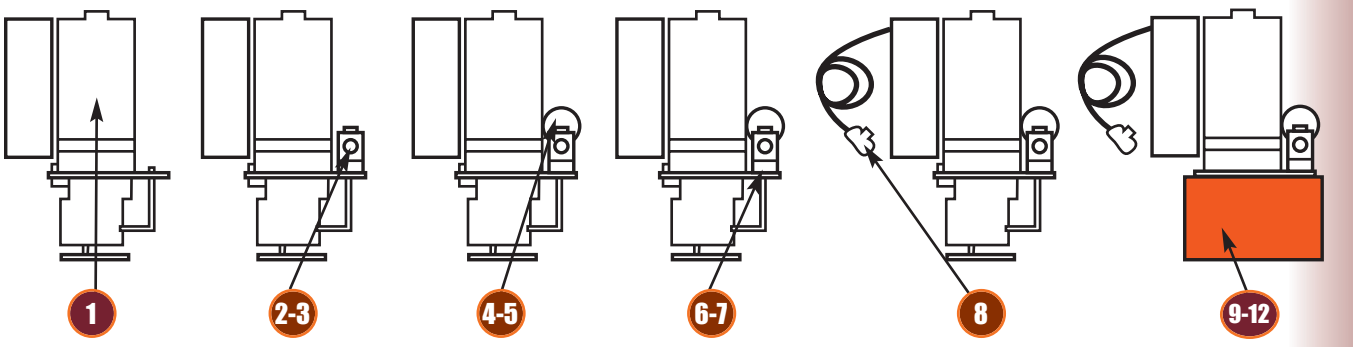

Basic Pump	Valve & Valve Control	Gauge & Gauge Accessories	Pressure Control & Switch	Motor Control	Reservoir, Level/Temp Gauge, Casters, Oil
PE55A–	VV–Z–	G–A–	A–A–	A–	D–BB–C–2F

Pump No. PE55A–VV–Z–G–A–A–A–A–D–BB–C–2F is a 700 bar two-speed pump with a 115 volt, 50Hz, single phase, 1,12 KW, 12,000 rpm motor;
a 9512
4-way solenoid valve with a 202778 remote hand control, a 9041 pressure gauge, no gauge accessories, standard pressure control, standard On-Off-Pulse motor control, 400630R9 7,6 liter reservoir, a 350431 oil level/temperature gauge, 10494 casters, and 7,6 liter of standard hydraulic oil.

See next two pages for pump components

Assemble to Order System

PUMP COMPONENT SPECIFICATION CHART

PUMPS

TO BUILD YOUR PUMP, FILL IN KEY LETTERS FROM CHARTS

1 Basic Pump	2 Select Valve	3 Select Valve Control	4 Select Gauge	5 Select Gauge Accessories	6 Pressure Control
7 Pressure Switch	**8 Motor Control**	**9 Reservoir**	**10 Level/Temp Gauge**	**11 Choose Casters**	**12 Select Oil**

Use the charts numbered from 1-12 below to select the pump, valve, gauge and other miscellaneous accessories to suit your needs. For the pump, fill in the basic number plus key letter in block 1 above and the key letter only in the blocks 2-12 above for any of the other items. Refer to the appropriate pages in this catalog for more specific information on the products you need.

1 BASIC PUMP (See pages 94-106)

BASIC PUMP NUMBERS						SPECIFICATIONS NOTE: Customer must specify voltage required.		
PE55 (700 bar)	PE90 (350 bar)	PE120 (700 bar)	PA55 (700 bar)	PA90 (350 bar)	PG55 (700 bar)	Power Source	rpm	KW
A or AC*	A or AC*					115V-60 Hz, 1Ø	12,000	0,84
						110V-50 Hz, 1Ø	12,000	0,84
B or BC*	B or BC*					230V-60 Hz, 1Ø	12,000	0,84
						220V-50 Hz, 1Ø	12,000	0,84
† C or CC*	† C or CC*					115V-60 Hz, 1Ø	3,450	1,12
† C50	† C50					110V-50 Hz, 1Ø	2,850	1,12
† D or DC*	† D or DC*					230V-60 Hz, 1Ø	3,450	1,12
† D50	† D50					220V-50 Hz, 1Ø	2,850	1,12
† F60 **	† F60**					208, 230/460V-60 Hz, 3Ø	3,450	1,12
† F50 **	† F50**					220/380V-50 Hz, 3Ø	2,850	1,12
		M60 **				208, 230/460V-60 Hz, 3Ø	3,450	2,24
		M50 **				220/380V-50 Hz, 3Ø	2,850	2,24
			A	A		Air Motor	3,000	2,24
					A	Gas Engine	3,600	4,47

*Suffixes AC, BC, CC & DC indicate pumps for Canadian orders only.
NOTE: All electric units have 24 volt secondary circuit.
**Specify voltage required.

† These pumps do not start under full load unless valve is in "neutral" position (requires open or tandem center valve) and are not recommended for frequent starting and stopping.

2 VALVE (See pages 50-60)

	Manifold/Manual/Air Operated Directional Valves	Function
AB	9628 manual, tandem center	4-way, 3 pos. valves
AC	9632 manual "twin" tandem and open center	
A	None	—
B	9626 manifold	Manifold
C	9584 manual	3-way, 2 pos. valves
D	9582 manual	
E	9610 automatic, pilot operated	
G	9504 manual	3/4-way, 2 pos. valves
JJ	9594 air operated	
L	9502 manual, closed center "non-interflow"	3-way, 3 pos. valves
M	9520 manual, tandem center "Posi-Check®"	
N	9576 manual, metering tandem center	
O	9609 manual, pressure compensated flow control	3-way, 4 pos.
R	9506 manual, tandem center "Posi-Check®"	4-way, 3 pos. valves
RR	9511 manual, open center	
S	9500 manual, tandem center	
T	9507 manual, closed center "Posi-Check®"	
U	9501 manual, closed center	
	Solenoid Operated Directional Valves	**Function**
FF	9569 solenoid operated - 24 volt	3-way, 2 pos.
HH	9572 solenoid operated - 24 volt	3/4-way, 2 pos.
PP	9599 solenoid operated - 24 volt	3-way, 3 pos.
VV	9512 solenoid operated - 24 volt	4-way, 3 pos. valves
WW	9615 solenoid operated - 24 volt	

3 VALVE CONTROL (See page 116)

	Valve Remote Control	Use with Valve
A	None	–
X	304718 remote hand control, 3,1 m	9572
XF	309652 remote foot control, 3,1 m	9572
Y	202777 remote hand control, 3,1 m	9569 or 9599
Z	202778 remote hand control, 3,1 m	9512 or 9615
ZF	309653 remote foot control, 3,1 m	9512, 9615, 9569 or 9599
ZZ	209593 remote hand control, 3,7 m	9594

4 GAUGE (See page 124-125)

	Pressure Gauges
A	None
B	Other – Specify
G	9041 0-10.000 psi – 0-700 Bar (63 mm dia.)
H	9040 0-10.000 psi – 0-700 Bar (Liquid) (63 mm dia.)
J	9051 0-10.000 psi – 0-700 Bar (100 mm dia.)
M	9052 0-10.000 psi – 0-700 Bar (Liquid) (100 mm dia.)

6 PRESSURE CONTROL (See page 133)

	Pressure Controls
A	With standard external pressure regulator
C	Other – specify
D	350199 premium external pressure regulator. See Power Team Catalog product No. 9633 for details.

NOTE: Pressure controls are factory pre-set at 700 bar unless otherwise specified.

8 MOTOR CONTROL (See page 116)

	Electric Motor Controls
A	Standard On/Off/Pulse control (does not include remote switch) for A, B, C, D, F and M electric pumps. Also used for remote controlled solenoid valves.
B	None
C	25017 remote motor hand switch, 3,1 m.
D	203225 remote motor hand switch, 3,1 m. (heavy duty)
E	10461 remote motor foot switch, 3,1 m.
	Air Motor Controls
AA	Other
B	None
P	27876 hand motor control (for PA55 & PA90 series)
Q	27877 foot motor control (for PA55 & PA90 series)

10 OIL LEVEL/TEMP. GAUGE (SEE PAGE 118)

	Oil Level/Temperature Gauge
A	None
BB	350431 oil level/temperature gauge

11 CASTERS (See page 124)

	Casters
A	None
C	10494 caster for use with 400630R9 reservoir (Specify quantity of four)

5 GAUGE ACCESSORY (See page 125)

	Gauge Accessories
A	None
N	9049 pulsation dampener – All dry gauges

7 PRESSURE SWITCH (See page 117)

	Pressure Switch
A	None
B	9625 electric pressure switch (35-700 bar)
	NOTE: Pressure switch is factory pre-set at 700 bar unless otherwise specified.
C	9641 pilot operated air control valve – N.C.
D	9643 pilot operated air control valve – N.O.

9 RESERVOIR (See page 119)

	Reservoirs	Capacity
A	None	–
B	Other – Specify	–
D	400630R9 – PE55, PE90, PE120, PA55 and PA90 series	9,5 l
E	61165† – PE55, PE90, PE120, PA55 and PA90 series (Oil temperatures in excess of 65.5˚ C. may cause permanent failure of the thermoplastic reservoir)	7,6 l
F	RP22‡ – PE55, PE90, PE120, PA55 and PA90 series	9,5 l
H	617990R9 Same as D except with drain port	9,5 l
J	RP50 – PE55, PE90, PE120, PA55 and PA90 series	19 l
K	401370R9 – PG55 series	19 l
P	209124 - PE55, PE90, PE120, PA55 and PA90 series	26,5 l
V	RP100 - PE55, PE90, PE120, PA55 and PA90 series	37,9 l
W	RP101 – PG55 series	37,9 l

NOTE: Includes cover adapter and misc. accessories when applicable.
†High density polyethylene.
‡Aluminum.

12 OIL (See page 126)

	Oil
E	Ship pump without oil
F	9637 3,8l. standard hydraulic oil
G	9638 9,5l. standard hydraulic oil
Q	9639 3,8l. Flame-Out hydraulic oil
R	9640 9,5l. Flame-Out hydraulic oil
U	9645 3,8l. biodegradable hydraulic oil
V	9646 9,5l. biodegradable hydraulic oil

NOTE: Select type of hydraulic oil and specify quantity.

Hydraulic Pump
ACCESSORIES

PUMPS

25017
202777
202778
304718

203225

10461

251660

309652
309653

209593

17627
216209

ON/OFF MOTOR CONTROL

The following remote control switches will give you momentary "ON" control of your hydraulic pump. These switches are deadman type, spring loaded to the "OFF" position. They can be used with any Power Team electric hydraulic pumps.

No. 25017 - Remote hand control. Has a push button switch, with a 3,1 m cord. Wt., 0.4 kg.

No. 203225 - Remote hand control. Heavy-duty with single push button switch in a neoprene housing with 3,1 m cord. Housing seals out dust, lint and liquids (unit is not submersible). Wt., 0,4 kg.

No. 10461 - Remote foot control, with 3,1 m cord. Wt., 1,4 kg.

No. 251660 - Remote foot control, with 3,1 m cord. For use with the PE10 style pumps. Wt., 0,4 kg.

SOLENOID & MOTOR CONTROL

For use on solenoid valves that are used on single-acting cylinders:

No. 202777 - Remote hand control. Has rocker style switch that is momentary advance, spring center hold and detented retract. It comes with a 3,1 m cord, for use with 3-way/2 or 3-position valves. Wt.,0,4 kg. For use on solenoid valves that are used on double-acting cylinders:

No. 202778 - Remote hand control. Has rocker style switch that is momentary advance, spring center hold and momentary retract. It comes with a 3,1 m cord, for use with 4-way/3-position valves. Wt., 0,4 kg

No. 309653 – Remote foot control. Can be used in place of either of the above hand controls to control the same type of valves. The switch is momentary on both the advance and retract position and is spring centered to the hold position. This foot switch comes with 3,1 m cord. Wt., 1,8 kg.

No. 17627 – Remote foot control. Same as the No. 309653 but without a cord. Wt., 0,9 kg.

No. 304718 - Remote hand control. Has a rocker style switch that is momentary advance, spring center hold and momentary retract. The switch is wired to start and stop the motor when the valve is energized. It comes with a 3,1 m cord. To be used with 4-way/2-position valves. Wt., 0.4 kg.

No. 309652 – Remote foot control. Has same functions as No. 304718. Supplied with a 3,1 m cord. To be used with 4-way/2-position valves. Wt., 1,8 kg.

No. 216209 – Remote foot control. Same as the No. 309652, but without a cord. Wt., 0,9 kg.

NOTE: See valves listing to determine which remote to use. Page 44-51.

REMOTE AIR MOTOR CONTROLS

This remote hand control has two momentary push buttons, one for advance and one for retract with spring offset to hold. To be used with 4-way/2-position air pilot valves.

No. 209593 – Remote hand control with 3,7 m cord. Wt., 0,9 kg.

SUBPLATES

For remote mounting of control valves. They convert pump mounted valves to remote mounted valves quickly and easily.

No. 9510 - Subplate for remote mounting the following valves; 9500, 9501, 9502, 9504, 9506, 9507, 9511, 9552, 9572, 9575, 9576, 9592, 9594 and 9609. Wt., 1 kg.

No. 9620 - For use with 9500, 9501, 9502, 9552, 9572, 9592 and 9594. Same as No. 9510 but has integral pressure regulating valve. Wt., 1,7 kg.

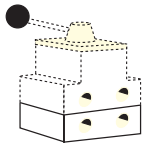

9510 and 9620 attach to the bottom of valve for remote mounting. The 9515 and 9521 mount between the pump cover plate and valve.

9510
9515

9620

PUMP-MOUNTED SUBPLATES

When fitted between pump cover plate valve mounting flange and control valve, provides a separate 3/8" NPTF female port, open to "return" regardless of position of valve. Also provides a separate 3/8" NPTF female pressure port. This subplate can be useful when you desire to use one pump with a deck-mounted control valve, plus a separate remote-mounted valve to control another function. For use with the following valves: 9500, 9501, 9502, 9504, 9506, 9507, 9511, 9552, 9572, 9575, 9576, 9592, 9594 and 9609.

No. 9515 - Subplate, Wt., 0,6 kg.

No. 9521 - Subplate for use under most pump mounted valves to provide adjustable pressure control on units not equipped with an external pressure regulator. Wt., 1,7 kg.

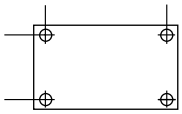

9521

AIR FILTER/REGULATOR/LUBRICATOR

Recommended for use with single-speed air/hydraulic pumps found on pages 55-69.

No. 9531 - Filter/regulator. 1/4" NPTF inlet and outlet. Wt., 0,4kg.

9531

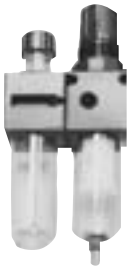

PRESSURE SWITCH

Application: Used in a hydraulic circuit where system pressure must be "held". Automatically (electrically) turns off pump motor when predetermined system pressure is reached. Attaches directly to control valve manifold or can be mounted "in-line" to read system pressure. Has a 1/4" NPTF male thread, and a 1/4" NPTF fitting for gauge mounting if required. Adjustable from 70 to 700 bar. Can also be used to actuate other electrical devices in the system. Wired "normally open" and held closed by spring pressure.

IMPORTANT: Electrical rating of switch is 5 amps at 250 volts max. To prevent permanent damage to switch, a control relay must be installed to handle currents or voltage exceeding these limits. Pressure switch should never be used to directly actuate the electrical motor.

No. 9625 - In-line pressure switch with 1/4" NPTF gauge port. Wt., 0,5 kg.

9625

PILOT OPERATED AIR CONTROL VALVES

Application: For use when an air pilot signal is required at a set hydraulic pressure. Can be used to shift valves, and start or stop pneumatic pumps. Attaches directly to control manifold or can be mounted "in-line" to read system hydraulic pressure. Automatically turns on an air pilot signal when a predetermined system pressure is reached. Has 1/4" NPTF male thread and 1/4" NPTF fitting for gauge mounting if required. Adjustable from 35-700 bar. Maximum rating of 700 l at 7 bar.

No. 9641 - Pilot operated control valve, normally closed, with 1/4" NPTF male thread. Wt., 0,4 kg.

No. 9643 - Same as 9641 except normally open. Wt., 0,4 kg.

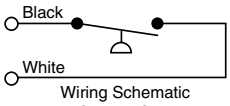

Wiring Schematic
N.O. Held Closed

9641
9643

PUMPS

Hydraulic Pump
ACCESSORIES

PUMPS

252511
252512

206767
250175

350431

10494

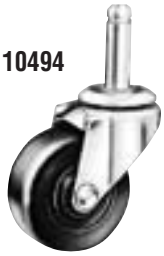

207762

16339

OIL COOLER KITS

No. 252511 - Oil cooler kit designed for use with PE604T or PE604PT pumps with 115 VAC. Wt.,2,2Kg.
No. 252512 - Oil cooler kit designed for use with PE604T or PE604PT pumps with 220 VAC. Wt.,2,2 kg.

RESERVOIR BREATHER KITS

No. 206767 - Reservoir breather kit designed for use on PA17, PA55, PE17, PE55, PE84, PE90, PE120, PG55, PG120, PQ60 and PQ120 series pumps. Wt., 0,6 kg.
No. 250175 - Reservoir breather kit designed for use on PE21 and PE46 series pumps. These kits replace the reservoir filler cap when the pump is used in dusty and dirty environments. Wt., 0,6 kg.

CASTERS

50,8 mm diameter casters attach to the bottom of large reservoir for portability. Sold individually; order the amount you need.
No. 10494 - Single caster wheel. Wt., 0,1kg.

FLUID LEVEL/TEMPERATURE GAUGE

Displays fluid level and temperature of hydraulic oil in reservoir. 32°-212°F, 0°-100°C. 32 mm wide and 162 mm high.
No. 350431 - Fluid level/temperature gauge.

FOOT CONTROL GUARD

Guard for use with 10461 and 251660 foot controls.
No. 16339 - Wt., 2 kg.

MAGNETIC STRIP

Magnetic strip with adhesive back can be added to No. 25017, 202777, 202778 and 304718 hand controls. Provides 2,7 kg. of holding force.
No. 207762 - Wt., 0,1 kg.

VITON* SEAL KITS

(SEE PAGE 33)

Viton* seal kits

Order Number	Use With	Model
300507	P12	All
300472	P23, P55	All
300510	P59	All
300508	P157, P159, P300	A
300690	P157, P159	B
300696	P300	B
300508	P157D, P159D, P300D	A
300693	P157D, P159D	B
300699	P300D	B

VITON* SEAL KITS Can be used in all "C" and "RH" series cylinders (see pages 14-15 and 22-23), as well as the P12, P55, P59, P157/P159, P157D/P159D and P300/P300D series of hand pumps. These seals are required when fire resistant hydraulic fluids are used. For use with phosphate ester fluids. Not required with Flame-Out fluid.

*** Viton is the E.I. duPont De Nemours & Co., Inc, trade name for flouroelastomers.**

UNIVERSAL PUMP CART

Mobilize your hydraulic pumps with the PC200. The rugged tubular frame can easily handle pumps weighing up to 90 kg. With 305 mm wheels, the cart rolls easily. Just load the pump onto the cart and wheel it right to the job. The universal mounting hole pattern lets you handle a wide variety of Power Team pumps.

No. PC200 - Universal pump cart with 305 mm wheels. Cart can be used with the following pumps: PA60, PA64 and PA554 air/hydraulic pumps; PE55 series, PE183-2 and PE184-2 electric/hydraulic pumps; PE21, PQ60 and PQ120 series "Quiet" pumps; PG55 series gas engine/hydraulic pumps; and pumps with optional 19- and 38 l - reservoirs; Nos. RP50, RP51, RP101 and RP103. Wt., 12,3 kg (Shown with pump, pump not included)

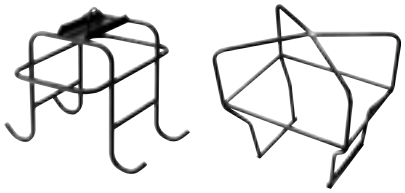

PROTECTIVE PUMP ROLL CAGE

Safeguards pump, gas engine and valves on the job site. Horizontal bars provide convenient hand holds for carrying pump, a pick-up point permits lifting unit with an overhead crane or other device. Standard equipment on PG1203 and PG1204. Can be ordered as an option with any other gas, air, or electrically driven hydraulic pump equipped with a 38 l reservoir.

Note: Refer to PG1203/PG1204 specification chart (pages 108-109) for dimensions of roll cage.

No. PC200RC - Roll cage for use with PC200. (Cannot be used on pumps with 38 liter reservoirs.) Wt., 16 kg.

No. RC5 - Roll cage. Wt., 9 kg.

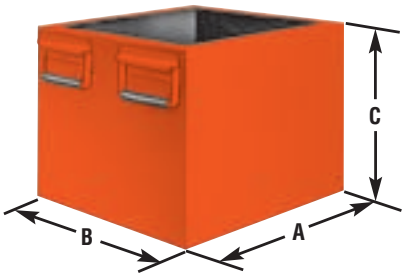

LARGE CAPACITY RESERVOIRS

Capacity (liter)	Order Number	Usable Oil (l/min)	Use With	Size (mm) A	B	C
7,6	**RP20****	7,1	PA6, PA50 series (models A-E)	292	241	165
7,6	**RP20-F****	7,1	PA6 series (model F), PA 50 series (model F & G)	292	241	165
9,5	**RP20M***	7,2	PA6, PA50 series (models A-E)	292	241	165
9,5	**RP20M-F***	7,2	PA6 series (model F), PA50 series (model F & G)	292	241	165
9,5	**RP21***	7,2	PE18 series	292	241	165
9,5	**RP22†**	7,1	PE55, PE90, PE120, PA55	292	241	165
19	**RP50**	18,4	PE55, PE90, PE120, PA55	381	318	203
19	**RP51**	18,4	PA46, PE46, PE21	381	318	203
37,9	**RP100**	35,1	PE55, PE90, PE120, PA55	381	318	356
37,9	**RP101**	35,1	PG55, PG120	381	318	356
37,9	**RP103***	37,0	PQ60, PQ120	392	362	313
37,9	**RP104**	35,1	PA46, PE46, PE21	381	318	356

* **Four mounting holes: 1/2"-20, for 50.8 mm diameter swivel casters (No. 10494)**

** High density polyethylene reservoir. † Aluminum reservoir.

NOTE: All metal reservoirs are equipped with drain plugs and all necessary conversion items. Hydraulic oil is not included with reservoir kits. Please order separately. See page 126.

METAL RESERVOIR CONVERSION KITS FOR PUMPS *INCLUDES GASKETS AND FASTENERS.

Metal Pump Number	Res. Order Number	Metal Reservoir Capacity (l)	Reservoir Weight (kg)	Metal Pump Number	Res. Order Number	Metal Reservoir Capacity (l)	Reservoir Weight (kg)	Metal Pump Number	Res. Order Number	Metal Reservoir Capacity (l)	Reservoir Weight (kg)
PA6	213896	1,7	1,4	**PA50**	213896	1,7	1,4	**PA174**	213895	9,5	4,1
PA6A	213896	1,7	1,4	**PA50R**	213896	1,7	1,4	**PE172**	213895	9,5	4,1
PA6D	213896	1,7	1,4	**PA6R**	213896	1,7	1,4	**PE172A**	213895	9,5	4,1
PA6-2	213895	9,5	4,1	**PA50R2**	213895	9,5	4,1	**PE172S**	213895	9,5	4,1
PA6D2	213895	9,5	4,1	**PA172**	213895	9,5	4,1	**PE174**	213895	9,5	4,1

HYDRAULIC ACCESSORIES

Hoses

Polyurethane Rubber Non-Conductive

- **3/8" NPTF fittings on both ends.**
- **Operating pressure is 700 bar. All comply with SAE 100R10 standard.**

A **Non-conductive hose**

For applications requiring electrical isolation by the hose, non-conductive hose has a leakage factor of less than 50 microamperes, considered a safe level of conductivity by SAE standards. The covering is polyurethane and colored orange for easy identification as non-conductive hose. The covering is not perforated, preventing moisture from entering the hose and affecting its overall conductivity. All non-conductive hoses have a minimum burst pressure of 2.800 bar.

B **Rubber hose**

6 spiral (R13 specification) rated hose reinforced with two braids of high tensile steel wire and have a tool 4:1 safety factor. The rubber covering is oil and weather resistant.

C **Polyurethane hose**

Made with Nylon core and then one braid of Aramid and one braid of wire reinforcement with a orange polyurethane cover (Conductive). 4:1 safety factor standard 700 bar WP / 2800 bar BP.

D **Hydraulic hose assembly**

No. 9764E – Hose assembly consisting of 9767E (1,8 m hose), 6,4mm I.D. polyurethane with 9798 hose half coupler and 9800 dust cap.

No. 9754 – Hose assembly consisting of 9756 (1,8 m hose), 6,4 mm I.D. rubber with 9798 hose half coupler and 9800 dust cap.

The figures show the relative effect two styles of hose can have on return time. Actual times may vary.

CYLINDER RETURN TIME

Cylinder	No. 9769E 3,1 m Hose 6,4 mm I.D.	No. 9781E 3,1 m Hose 9,5 mm I.D
C2514C	51 sec.	14 sec.
C556C	1 min., 30 sec.	24 sec.
C5513C	4 min., 12 sec.	59 sec.
C10010C	6 min., 56 sec.	1 min., 3 sec.

Hose Type	Hose I.D.	Hose Length	Burst Rating	Order No.
Polyurethane	6,4 mm	0,6 m	2 800 bar	**9765E**
Polyurethane	6,4 mm	0,9 m	2 800 bar	**9766E**
Polyurethane	6,4 mm	1,8 m	2 800 bar	**9767E**
Polyurethane	6,4 mm	1,8 m	2 800 bar	**9764E***
Polyurethane	6,4 mm	2,4 m	2 800 bar	**9768E**
Polyurethane	6,4 mm	3,1 m	2 800 bar	**9769E**
Polyurethane	6,4 mm	3,7 m	2 800 bar	**9770E**
Polyurethane	6,4 mm	6,1 m	2 800 bar	**9771E**
Polyurethane	6,4 mm	15,3 m	2 800 bar	**9772E**
Polyurethane	6,4 mm	22,9 m	2 800 bar	**9750E**
Polyurethane	6,4 mm	30,5	2 800 bar	**9751E**
Polyurethane	9,5 mm High Flow	1,8 m	2 100 bar	**9780E**
Polyurethane	9,5 mm High Flow	3,1 m	2 100 bar	**9781E**
Polyurethane	9,5 mm High Flow	6,1 m	2 100 bar	**9782E**
Polyurethane	9,5 mm High Flow	15,3 m	2 100 bar	**9783E**
Rubber, Wire-braid	6,5 mm	0,9 m	2 800 bar	**9755E**
Rubber, Wire-braid	6,5 mm	1,8 m	2 800 bar	**9756E**
Rubber, Wire-braid	6,5 mm	1,8 m	2 800 bar	**9754E***

Hose Type	Hose I.D.	Hose Length	Burst Rating	Order No.
Rubber, Wire-braid	6,4 mm	2,4 m	2 800 bar	**9757E**
Rubber, Wire-braid	6,4 mm	3,1 m	2 800 bar	**9758E**
Rubber, Wire-braid	6,4 mm	3,7 m	2 800 bar	**9759E**
Rubber, Wire-braid	6,4 mm	6,1 m	2 800 bar	**9760E**
Rubber, Wire-braid	6,4 mm	9,1 m	2 800 bar	**9761E**
Rubber, Wire-braid	6,4 mm	15,3 m	2 800 bar	**9762E**
Rubber, Wire-braid	9,5 mm High Flow	0,9 m	2 800 bar	**9733E**
Rubber, Wire-braid	9,5 mm High Flow	1,8 m	2 800 bar	**9776E**
Rubber, Wire-braid	9,5 mm High Flow	3,1 m	2 800 bar	**9777E**
Rubber, Wire-braid	9,5 mm High Flow	4,6 m	2 800 bar	**9734E**
Rubber, Wire-braid	9,5 mm High Flow	6,1 m	2 800 bar	**9778E**
Rubber, Wire-braid	9,5 mm High Flow	9,1 m	2 800 bar	**9735E**
Rubber, Wire-braid	9,5 mm High Flow	12,2 m	2 800 bar	**9736E**
Rubber, Wire-braid	9,5 mm High Flow	15,3 m	2 800 bar	**9779E**
Non-Conductive	6,4 mm	1,8 m	2 800 bar	**9773**
Non-Conductive	6,4 mm	3,1 m	2 800 bar	**9774**
Non-Conductive	6,4 mm	6,1 m	2 800 bar	**9775**

CE

NOTE: Polyurethane hoses not recommended for use where heat or weld splatter conditions exist.

*Furnished with 9798 hose half coupler and 9800 dust cap.

Couplers

Standard & Flush-Face

9795 Cylinder and Hose Couplers

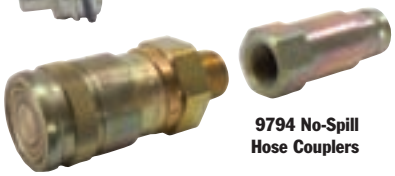

9794 No-Spill Hose Couplers

9796

9798

9792

9793

9797

9799

9800

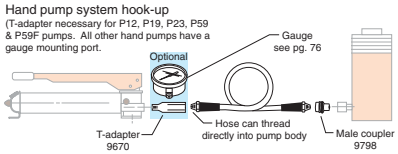

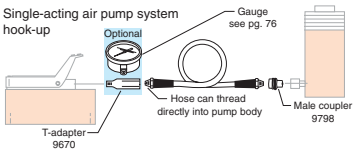

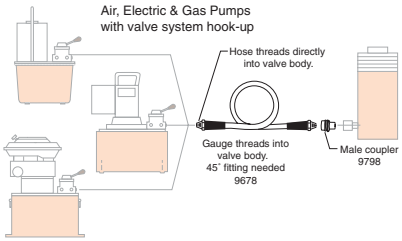

CYLINDER AND HOSE COUPLERS
Designed for use up to 700 bar with hydraulic jacks, cylinders, etc. They are the threaded union type for interchanging cylinders in seconds. Each half is valved with a precision ball for a tight shutoff when disconnected. These couplers also permit the separation of cylinders or hose from pump when at 0 psi with minimal oil loss.

No. 9795 – Complete quick coupler, 3/8" NPTF. (Includes two 9800 dust caps.)
No. 9798 – Male (hose) half coupler (less hose half dust cap), 3/8" NPTF.
No. 9796 – Female (cylinder) half coupler with No. 9800 dust cap, 3/8" NPTF.
No. 9796-V – Same as 9796, but with Viton seals.
No. 9796-E – Same as 9796, but with EPR seals.
No. 9799 – Optional metal dust cap (hose half).
No. 9797 – Optional metal dust cap (cylinder half).

NO-SPILL, PUSH-TO-CONNECT HYDRAULIC HOSE COUPLERS
High flow, no-spill, push-to-connect couplers with locking collar and flush face designed for high pressure applications. The flush-face concept makes it easy to clean both coupler ends before connecting. Our unique push-to-connect, "dry-break" design eliminates oil spillage. The locking collar makes accidental disconnects a thing of the past. For 700 bar operation. Designed to permit high oil flow.
No. 9792 – Female (cylinder) half quick coupler only. Wt., 0.1 kg.
No. 9793 – Male (hose) half quick coupler only. Wt., 0,1 kg.
No. 9794 – Complete quick coupler (male and female). Dust caps not included. Wt.,0,2 kg.

HYDRAULIC COUPLER DUST CAP
Dust cap fits either male or female half couplers.
No. 9800 – Dust cap. For male or female 3/8" NPTF half couplers. Wt., 0,1 kg.

Gauges

Analog & Digital

63,5 mm

9040

101,6 mm

9052

152,4 mm

9089

ASME B40.1
GRADE B

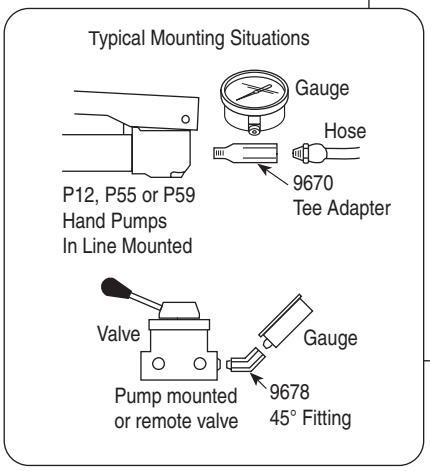

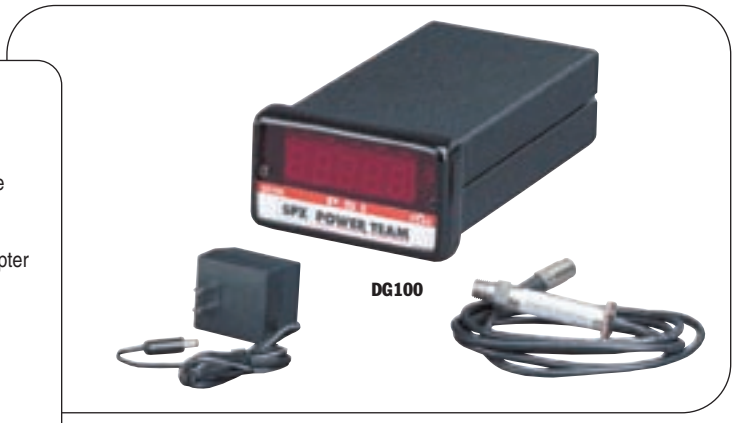

DG100

Heavy-duty Hydraulic Pressure Gauges

- Gauges feature an easily readable and highly visible, red day-glo needle.
- High strength steel bourdon tube ensures high cycle life.
- Have 1/4" NPT connections.

Digital Pressure Gauges

- Accurate to within 1%.
- Larger display characters than ordinary digital gauges.
- Long-life pressure transducer.
- 1/4" NPTF male threads for the pressure connection.
- 1,8 m signal input cable connects to back of display unit.

FEATURES

- Pressure values are displayed on large red LEDs in 0,7 bar or bar increments.
- "Peak" hold feature with reset toggle switch and "Peak On" indicator; Hi/Low set point feature with relay outputs for Hi/Low alarms and/or control signals.
- A slow flashing display indicates pressure below the low limit; fast blinking display alerts if limit is exceeded.
- High and low limit relays are rated to 5 amps at 115 volts.
- Operating temperature of -18 to 60°C for the electronic display and -29 to 82°C for the transducer. Gauge housings are extruded aluminum 1/8 DIN enclosures (NEMA 1 rating).
- When power cable is connected to gauge, display will scroll all characters, performing a self-diagnostic routine.

Gauges

Analog & Digital

Digital Pressure Gauge

No. DG100 – Digital pressure gauge, pressure range 0-700 bar. Note: Serviced only at factory. Wt.,1 kg.

No. DG100B – Digital pressure gauge, pressure range 0-700 bar. Note: Serviced only at factory. Wt., 1 kg.

Digital Pressure Gauge Accessories

No. 420778 – Gauge stand for DG100. Has angled base mounting to hold gauge at a convenient viewing angle. Wt., 0,5 kg.

No. 37045 – Auxiliary power cord for use with any 12 or 24V battery. Wt., 0,1 kg. Caution: For use on negative ground systems only.

Standard Pressure Gauge Accessories

No. 9046 – Silicone fill kit. 0,2 kg Requires one bottle to fill 100 mm gauge; four bottles to fill 150 mm gauge.

No. 9049 – High performance pulsation dampener. 1/4 " NPTF male x 1/4" NPTF female.

STANDARD PRESSURE GAUGE ORDERING INFORMATION

Face Dia.	psi/Bar	Tons	Major Graduations	Minor Graduations	Silicone Filled	Use With Cylinder Series	Gauge No.
63,5 mm	0-10,000 /.0-690	–	2000 psi, 100 Bar	200 psi, 20 Bar	Yes	All	**9040E**
100 mm	0-10,000 /.0-690	–	1000 psi, 100 Bar	100 psi, 10 Bar	Yes	All	**9052E**
100 mm	0-10,000 /.0-690	0-17.5, 0-30 and 0-50	2000 psi, 5 Ton	200 psi, .5 Ton on 30, 50 Ton Scales; .2 Ton on 17.5 Ton Scale	Yes	RT172, RT302, RT503	**9059E**
100 mm	0-10,000 /.0-690	0-5	2000 psi, 1 Ton	200 psi, .1 Ton	Yes	C & RLS	**9053E**
100 mm	0-10,000 /.0-690	0-10	2000 psi, 1 Ton	200 psi, .1 Ton	Yes	C, RD, RH, RLS & RSS	**9055E**
100 mm	0-10,000 /.0-690	0-25	2000 psi, 5 Ton	200 psi, .5 Ton	Yes	C & RD	**9063E**
100 mm	0-10,000 /.0-690	0-30	2000 psi, 5 Ton	200 psi, .5 Ton	Yes	RH†, RLS & RSS	**9065E**
100 mm	0-10,000 /.0-690	0-50	2000 psi, 5 Ton	200 psi, .5 Ton	Yes	RH†, RLS & RSS	**9067E**
100 mm	0-10,000 /.0-690	0-55	2000 psi, 5 Ton	200 psi, .5 Ton	Yes	C, R, RA & RD	**9069E**
100 mm	0-10,000 /.0-690	0-60	2000 psi, 5 Ton	200 psi, 1 Ton	Yes	RH	**9071E**
100 mm	0-10,000 /.0-690	0-75	2000 psi, 5 Ton	200 psi, 1 Ton	Yes	C, RLS & RD8013	**9073E**
100 mm	0-10,000 /.0-690	0-100	2000 psi, 10 Ton	200 psi, 1 Ton	Yes	C, R, RA, RD, RH, RLS†, RSS† & RT1004†	**9075E**
100 mm	0-10,000 /.0-690	0-150	2000 psi, Initial 10 Then 20 Ton	200 psi, 2 Ton	Yes	C, R, RD & RLS	**9077E**
100 mm	0-10,000 /.0-690	0-200	2000 psi, 20 Ton 10 Then 20 Ton	200 psi, 2 Ton	Yes	R, RD & RH†	**9079E**
150 mm	0-10,000 /.0-690	0-690	1000 psi, 100 Bar	100 psi, 10 Bar	No	All	**9089**

† The tonnage scale on the gauge is based on a different effective area.
A slight error in tonnage reading will occur relative to the different effective area.

Note: Gauge 9040-9079 are available with readings in bar. To order, add the letter "E" to the part number (example 9075E).

Fluids
HYDRAULIC

Standard, Flame Out®, Biodegradable and Low Temp.

Oil Description	Qty.	Order No.
Standard Oil	0,9 l	**9636**
Standard Oil	3,8 l	**9637**
Standard Oil	9,5 l	**9638**
Standard Oil	208 l	**9616**
Flame-Out®	3,8 l	**9639**
Flame-Out®	9,5 l	**9640**
Biodegradable	3,8 l	**9645**
Biodegradable	9,5 l	**9646**
Low Temp.	3,8 l	**9647**

SPECIFICATIONS

Description	Grade (ASTM)	Spec. Gravity at 16°C (kg / l)	Color (ASTM)	Flash Point	Fire Point	Pour Point	Viscosity SUS @ (38°C)	Viscosity SUS @ (99°C)	Viscosity Index	Foam Test (ASTM)
Standard Oil	215	0.88	2.0	204°C	221°C	-34°C	215	48	100 min.	Pass
Flame-Out®	220	0.91	Light Amber	260°C	288°C	-26°C	220	55	140 min.	Pass
Biodegradable	—	0.92	2.0	224°C	NA*	-30°C	183	53	213 min.	Pass
Low Temp.	—	0.87	6.5 (Red)	180°C	204°C	-45°C	183	52	190 min.	Pass

*Not available.

Standard Hydraulic Oil
- For dependable performance of all your hydraulic pumps and cylinders.
- Contains foam suppressant additives and has a high viscosity index.

Flame-Out® 220 fire resistant hydraulic fluid
- Contains anti-rust, anti-foam and anti-sludge additives.
- Provides fire resistant protection.
- Provides maximum lubrication and heat transfer.
- Offers a wider operating temperature range.
- No need to change seals in your Power Team equipment. Just drain the standard oil and replace it with Flame-Out 220.

Biodegradable Hydraulic Fluid
- Biodegradable, non-toxic fluid withstands moderate to severe operating conditions; provides excellent protection against rust.
- Offers superior anti-wear properties, has excellent multi-metal compatibility.

Developed to meet stringent performance requirements and satisfy growing environmental needs for hydraulic fluids which are readily biodegradable and non-toxic. Can be used with all Power Team pumps, cylinders, valves and other accessories using standard seals. Depending on the contamination or degradation levels which might be present in used fluid, small amounts of this substance, if spilled, will not affect ground water or the environment. Acceptable methods of disposal include use as a fuel supplement. Since this fluid will not typically be hazardous waste, additional disposal options may be available, including land farming or processing through sewage treatment facilities, if necessary approvals are obtained from appropriate regulatory authorities. This fluid has been tested against EPA 560/6-82-003 and OECD 301 for biodegradability, and toxicity has been tested against EPA 560/6-82-002 and OECD 203: 1-12. Not recommended for operation in temperatures below -7°C or above 71°C. Recommended storage temperatures not below -23°C or above 77°C.

For additional technical information or to order a **MATERIAL SAFETY DATA SHEET** call **1-800-477-8326**

Low–Temperature Oil
Provides smooth, reliable operation in the coldest climate conditions.

(Note: Will burn if heat source is extreme enough. Will not, however, propagate the flame and is self-extinguishing when there is no ignition source.)

Manifolds

Remote and Pump Mounted

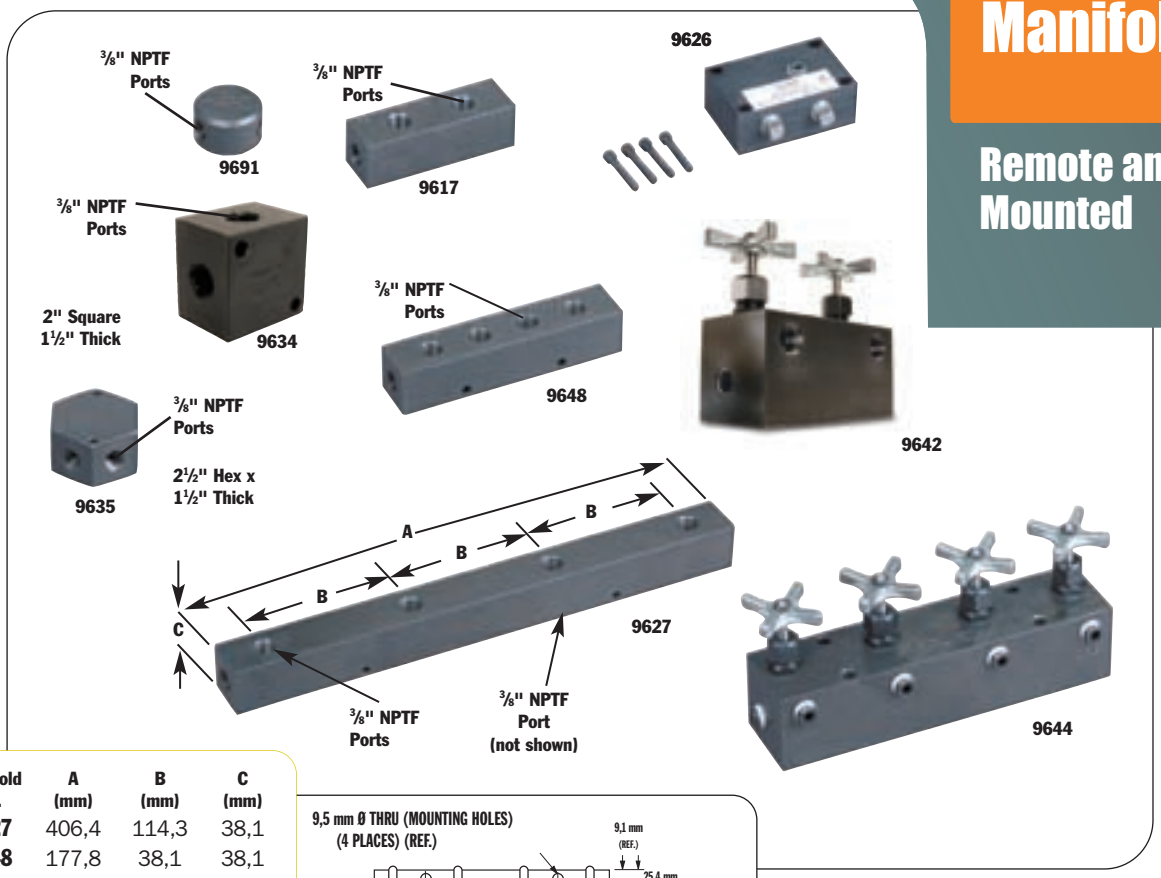

Manifold No.	A (mm)	B (mm)	C (mm)
9627	406,4	114,3	38,1
9648	177,8	38,1	38,1

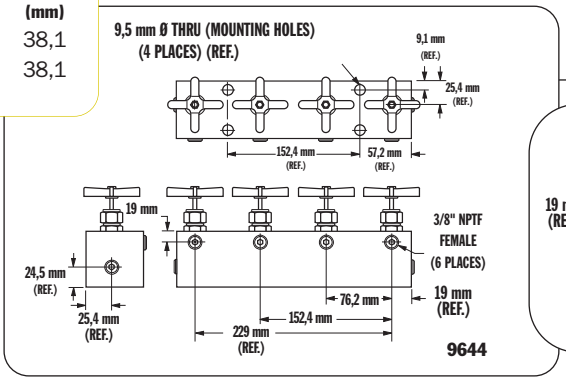

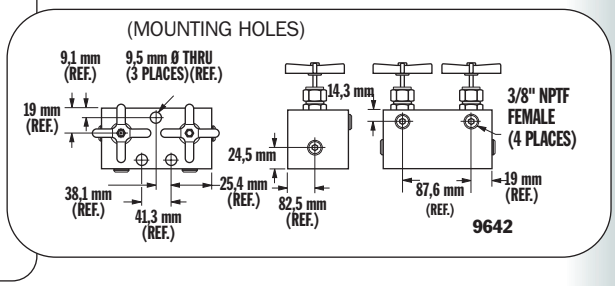

No. 9691 – "Y" Manifold
Extremely useful when connecting two hydraulic cylinders to a single line. Has three 3/8" NPTF ports. Wt. 0,45 kg.

No. 9634 – Manifold block
This manifold is for multiple-cylinder installations, has four 3/8" NPTF ports and two 1/4" mounting holes. Wt. 0,7 kg.

No. 9635 – Manifold block
This hex-shaped manifold offers extra versatility with six 3/8" NPTF ports and two 1/4" mounting holes. Wt. 0,9 kg.

No. 9617 – Manifold block
When a multiple-cylinder installation is required, this manifold is invaluable. Has six 3/8" NPTF ports to handle larger multiple-cylinder systems. Wt. 1.4 kg.

No. 9648 – Manifold block
This 178 mm long manifold block has seven 3/8" NPTF ports and two 6,4 mm mounting holes. Wt.1,2 kg.

No. 9627 – Manifold block
This 406,4 mm long manifold block allows you to mount the 9575 or 9596 valves without interference. Has seven 3/8" NPTF ports and two 6,4 mm mounting holes. Wt. 2,7 kg.

No. 9626 – Pump mounted manifold block
Converts pumps with pump mounted valves for use with remote mounted valves. This manifold block is subplate mounted on the pump cover plate and provides 3/8" NPTF pressure and return ports. Maximum recommended flow rate is 19 l/min. Note: If used on PE30 or PG30 series pump, 12,7mm longer mounting screws are required. Order four (4) No. 11956 screws separately.

9642 AND 9644 MANIFOLD BLOCKS WITH NEEDLE VALVES
For independent multiple-cylinder operation, feature needle valves for precise manual control. Designed for remote-mounted applications. Can be used with all Power Team pumps.

No. 9642 – Manifold with two needle valves for control of two cylinders. Has four 3/8" NPTF ports. Wt. 3,7 kg

No. 9644 – Manifold with four needle valves for control of four cylinders. Has six 3/8" NPTF ports. Wt. 7,4 kg

Fittings

700 bar

Power Team fittings:
All applications.

HYDRAULIC ACCESSORIES

	**9190**	Hyd. tubing. 3/8" O.D. x .065" wall, 15,3 m. (10 pieces 1,53 m long.) Wt. 5,5 kg.
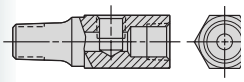	**9670**	Tee adapter. For installing gauge between pump and hose coupling. Has 1/4" and 3/8" NPTF female and 3/8" NPTF male ports. Wt. 0,2 kg.
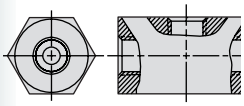	**9671**	Double tee adapter. Permits use of more than one cylinder in series with one pump. Three 3/8" NPTF female ports. Wt. 0,5 kg.
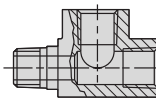	**9672**	Service tee. Two 3/8" NPTF female internal, one 3/8" NPTF male external. Wt. 0.3 kg.
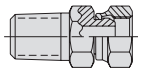	**9673***	Swivel connector. 3/8" NPSM male, 1/4" NPSM female. Wt. 0,1 kg.
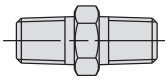	**9674**	Male connector. 43 mm long, 1/4" x 3/8" NPTF. Wt. 0,1 kg.
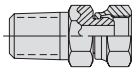	**9675***	Swivel connector. 3/8" NPTF male, 3/8" NPSM female. Wt. 0,1 kg.
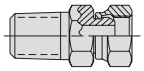	**9676***	Swivel connector. 1/4" NPTF male, 3/8" NPSM female. Wt. 0,1 kg.
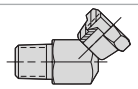	**9677***	45° swivel connector. 3/8" NPTF male, 3/8" NPSM female. Wt. 0,1 kg.
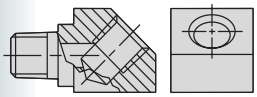	**9678**	45° fitting. Used when mounting gauge at an angle on connection such as 9670. Male and female 1/4" NPTF ends. Wt. 0,1 kg.
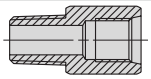	**9679**	Connector. 1/4" NPTF female and 3/8" NPTF male. Wt. 0.1 kg.
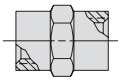	**9680**	Coupling. Both ends 3/8" NPTF female. Wt. 0.1 kg.
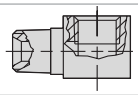	**9681**	Street elbow. Male and female 3/8" NPTF ends. Wt. 0,1 kg.
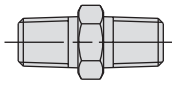	**9682**	Male connector. 43 mm long, 3/8" NPTF male ends. Wt. 0,1 kg.
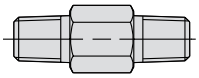	**9683**	Male connector. 57 mm long, 3/8" NPTF male ends. Wt. 0,1 kg.
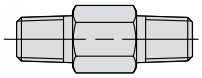	**9684**	Male connector. 57 mm long, 1/4" NPTF male ends. Wt. 0,1 kg
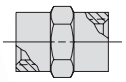	**9685**	Coupling. 1/4" NPTF female and 3/8" NPTF female. Wt. 0.1 kg.
	**9686**	90° elbow. 3/8" NPTF female ends. Wt. 0.2 kg.
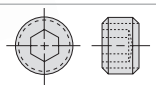	**9687**	Pipe plug. Heat-treated, 3/8" NPTF. Wt. 0.1 kg.
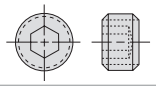	**9688**	Pipe plug. Heat-treated, 1/4" NPTF. Wt. 0.1 kg.
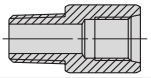	**9689**	Connector. 1/4" NPTF male and 3/8" NPTF female. Wt. 0.1 kg.
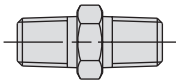	**9690**	Male connector. 43 mm long, 1/4" NPTF male ends. Wt. 0.1 kg.
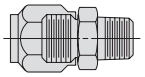	**9692**	Straight connector. 3/8" tube x 3/8" male NPTF. Wt. 0.1 kg.
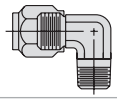	**9693**	90° elbow. 3/8" tube x 3/8" male NPTF. Wt. 0.1 kg.
	**9694**	45° elbow. 3/8" tube x 1/4" male NPTF. Wt. 0.1kg.
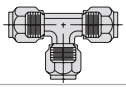	**9695**	Tee. 3/8" tube. Wt. 0.1 kg.
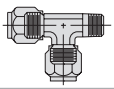	**9696**	Male run tee. 3/8" tube x 1/4" male NPTF. Wt. 0.1 kg.
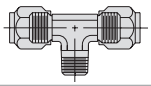	**9697**	Male branch tee. 3/8" tube x 1/4" male NPTF. Wt. 0.1 kg.
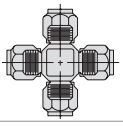	**9698**	Cross. 3/8" tube. Wt. 0.2 kg.
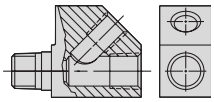	**9699**	45° gauge fitting. 3/8" NPTF male and female, and 1/4" NPTF female at 45°. Wt. 0.3 kg.
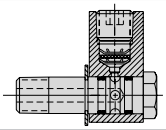	**9705**	Fitting, swivel. 3/8" NPTF male to 3/8" NPTF female. 90° fitting with internal 370 micron screen. May be rotated 360° about male thread axis.

NOTE: Power Team hydraulic fittings are intended for use with our high pressure hydraulic products and are suitable for use at max. working pressures of 700 bar unless otherwise noted.

*** ⚠ CAUTION: On part numbers 9673, 9675, 9676 and 9677 the female swivel end of these adapters is a straight pipe thread (NPSM) with a 30° seat. All male pipe fittings that are used with these female swivel adapters must have an internal 30° seat in order to effect a proper seal. All Power Team male fittings are manufactured with a 30° seat except 9687 and 9688.**

Valve selection chart

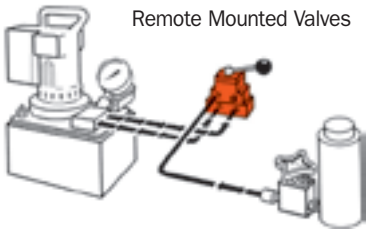

Order No.	Page No.	*Cylinder Application	Operation	Valve Type	Volt	Advance/ Return	Advance/ Hold Return	Posi-Check® Feature
9508	131	S.A & D.A.	Manual	4-way, 3 Pos. Closed Center	—	no	yes	yes
9509	131	S.A. & D.A.	Manual	4-way, 3 Pos. Tandem Center	—	no	yes	yes
9514	131	D.A.	Solenoid	4-way, 3 Pos. Tandem Center	115	no	yes	yes
9524	130	S.A. & D.A.	Solenoid	3/4-way, 2 Pos.	230	no	yes	no
9525	131	D.A.	Solenoid	4-way, 3 Pos. Tandem Center	230	no	yes	yes
9526	131	S.A.	Solenoid	3-way, 2 Pos.	230	no	yes	no
9554	130	S.A. & D.A.	Solenoid	3/4-way, 2 Pos.	24	no	yes	no
9555	131	D.A.	Solenoid	4-way, 3 Pos. Tandem Center	24	no	yes	yes
9556	131	S.A.	Solenoid	3-way, 2 Pos.	24	no	yes	no
9559	131	S.A.	Solenoid	3-way, 2 Pos.	115	no	yes	no
9593	130	S.A. & D.A.	Solenoid	3/4-way, 2 Pos.	115	no	yes	no
9595	130	S.A. & D.A.	Air	3/4-way, 2 Pos.	—	no	yes	no

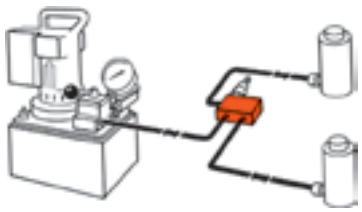

Order No.	Page No.	*Cylinder Application	Operation	Valve Type	Volt	Advance/ Return	Advance/ Hold Return	Posi-Check® Feature
9575	132	S.A.	Manual	Shut-Off Valve	—	—	—	—
9580	133	S.A.	Automatic	One-way Check Valve	—	—	—	—
9581	133	S.A. & D.A.	Automatic	Pilot Op. Check Valve	—	—	—	—
9596	132	S.A.	Manual	Load Lowering Valve	—	—	—	—
9597	132	S.A. & D.A.	Automatic	Sequence Valve	—	—	—	—
9608	132	S.A. & D.A.	Automatic	Pressure Reducing Valve	—	—	—	—
9623	133	S.A. & D.A.	Automatic	Pressure Relief Valve	—	—	—	—
9631	133	S.A. & D.A.	Automatic	Metering Valve	—	—	—	—
9633	133	S.A. & D.A.	Automatic	Pressure Regulator Valve	—	—	—	—
9720	132	S.A. & D.A.	Automatic	Counter Balance Valve	—	special	—	—
9721	132	S.A. & D.A.	Automatic	Counter Balance Valve	—	special	—	—
RV21278	133	—	Automatic	Relief Valve	—	—	—	—

"S.A." represents single-acting cylinders, "D.A." represents double-acting cylinders.
For pump-mounted valves, see pages 51-57.

Valves
HYDRAULIC REMOTE MOUNTED

700 bar,
1/4" ports
19 l / min max flow

3/4-way/2-position solenoid
and air actuated valves

HYDRAULIC ACCESSORIES

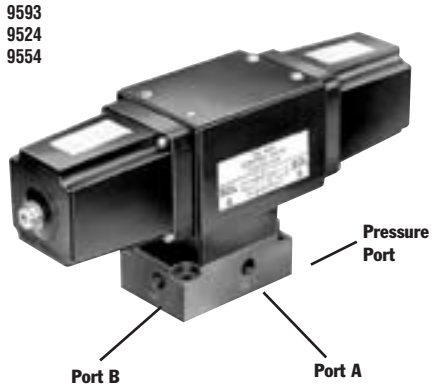

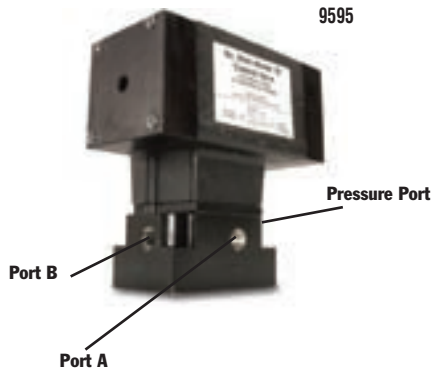

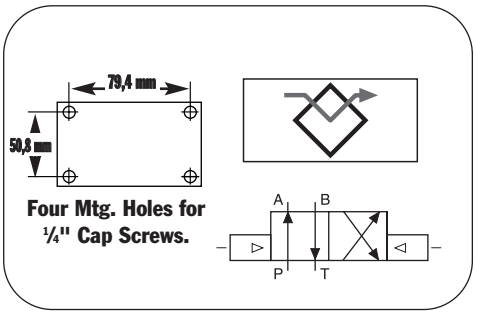

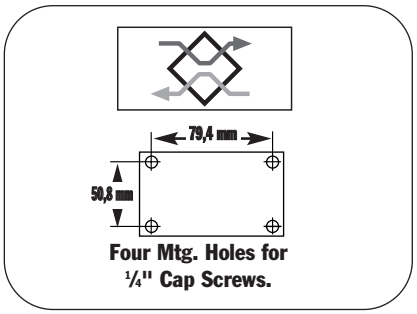

Application: Single- or double-acting cylinders.
Actuation: 9593, 9524 and 9554 are solenoid operated, 9595 is air operated.
Operation with single-acting cylinder: Either oil port "A" or "B" must be plugged on valve. With port "B" plugged, solenoid is energized to position "A," oil port "A" becomes pressurized. When solenoid is energized to position "B," oil port "A" becomes the return port.
Operation with multiple single-acting cylinders: A pressure line from one bank can be connected to oil port "A" and the other to oil port "B" on the valve. Sequence: When energized to position "A," oil port "A" becomes pressurized and clamps the fixture connected to oil port "A"; oil port "B" becomes a "return" port for cylinder connected to oil port "B," and retracts it. The opposite happens when solenoid "B" is energized.

Operation with double-acting cylinder: Port "A" is connected to "advance" port of cylinder, oil port "B" connects to cylinder "return" port. Solenoid is energized to position "A," oil port "A" becomes pressurized to extend cylinder piston. The opposite happens when solenoid "B" is energized. Valve does not hold in "retract" position.

NOTE: When using more than one valve on a pump, the tank port may require a check valve to permit inadvertent, momentary extension of a retracted cylinder.

NOTE: If pump is equipped with an internal outlet check, a "hold" position can be maintained with the pump shut off.

No. 9593 – 3/4-way/2-position, remote mounted solenoid valve, 115 volt, 50/60 Hz. Wt., 7 kg.
No. 9524 – Same as 9593 except with 230 volt, 50/60 Hz.
No. 9554 – Same as 9593 except with 24 volt, 50/60 Hz.
No. 9595 – Same as 9593 except is air operated (minimum of 3,5 bar air pressure required). Wt.,5,2 kg.

NOTE: Valves above are shipped without controls. The 9524, 9554 and 9593 can be used with the 304718 remote hand control (see page 106). The 9595 can be used with the 209593 remote hand control (see page 106).

NOTE: Valves have 1/4" NPTF ports. 3/8" to 1/4" adapters are included.

NOTE: Maximum tank line pressure for remote mounted valves is 35 bar.

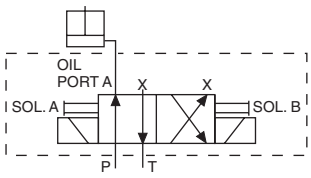

1. To actuate one single-acting cylinder.

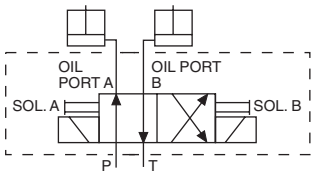

2. To actuate two single-acting cylinders.

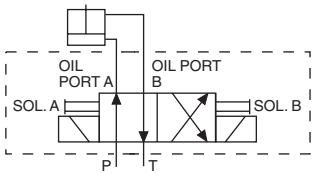

3. To actuate one double-acting cylinder.

NOTE: Valves above are shipped without control switch. Use 202777 remote hand switch (see page 116).

⚠ CAUTION: To prevent sudden, uncontrolled descent of a load as it is being lowered, use a No. 9596 Load Lowering Valve or No. 9720 Counter Balance Valve (see page 132) in conjunction with the directional valve used in your application.

Valves
HYDRAULIC REMOTE MOUNTED

700 bar,
3/8" ports
19 l / min max flow

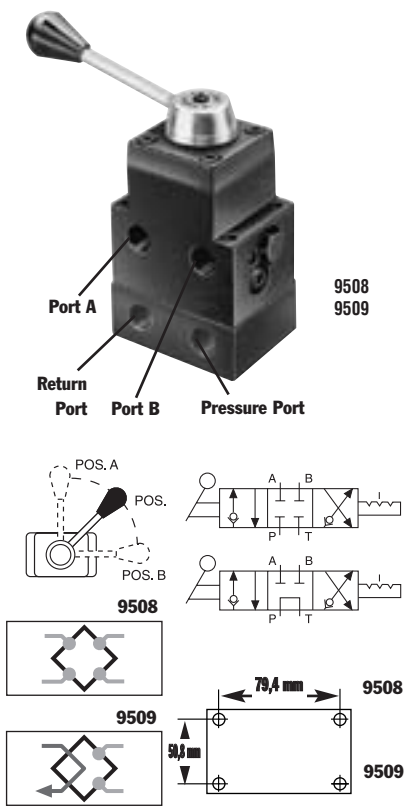

4-way/3-position (closed center) and (tandem center) manual valves with Posi-Check®
Application: Single- or double-acting cylinder. When used with single-acting cylinders, one port must be plugged. For double-acting cylinders, either port can be used for "advance" or "return."
Actuation: Lever-operated, detent positioned.
Functions: The 9508 provides "advance," "hold" and "return" positions with all ports blocked (closed center) in the "hold" position. The 9509 has "advance," "hold" and "return" with tandem center (cylinder ports are blocked, pump remains running). Both valves have "Posi-Check®" feature to guard against pressure loss when shifting from "advance" to "hold."
No. 9508 – 4-way/3-position (closed center) manual valve, including subplate for remote mounting. Wt., 2,9 kg.
No. 9509 – Same as 9508, except is tandem center.

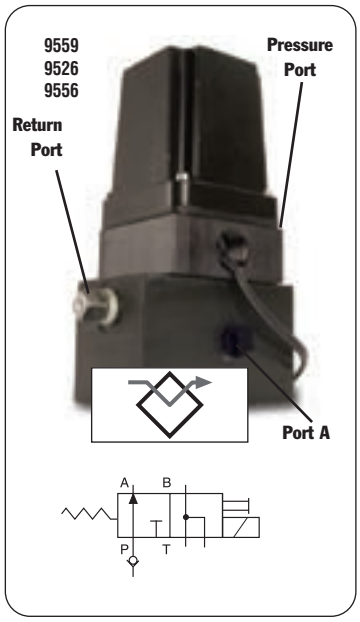

3-WAY/2-POSITION SOLENOID VALVE
Application: Single-acting cylinders.
Actuation: Solenoid operated, 115 volt, 50/60 Hz.
Function: Advances cylinder piston when solenoid is de-energized, and pump is running. When solenoid is energized, oil is directed back through valve "return" port and cylinder piston returns. To place cylinder in "hold" position, pump must be stopped or its flow held at the valve "pressure" port with the solenoid de-energized.
NOTE: Valve is equipped with a 9631 snubber valve in port "A." The line from the "return" port of the valve must be unrestricted (7 bar back pressure maximum) back to the reservoir.
IMPORTANT: A 9580 in-line check valve (see page 123) must be installed in the "pressure" port if the supply pump is not equipped with an outlet check valve.
No. 9559 – 3-way/2-position solenoid valve, 115 volt 50/60 Hz. Includes a remote mounting subplate. Wt., 4,4 kg.
No. 9526 – Same as 9559 except for 230 volt, 50/60 Hz.
No. 9556 – Same as 9559 except for 24 volt, 50/60 Hz.
NOTE: Valves above are shipped without control switch. Use 202777 remote hand switch (see page 106).

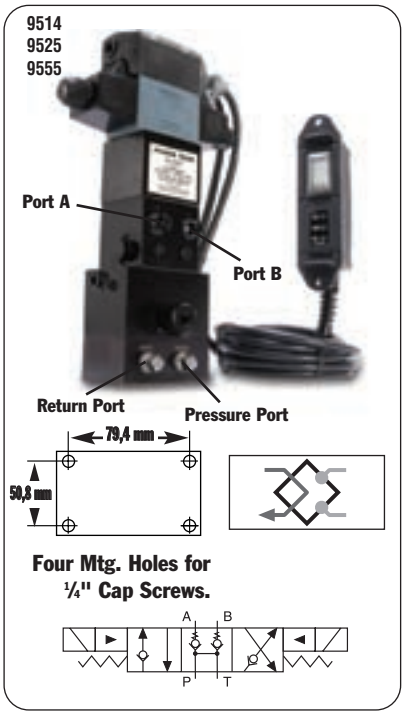

4-way/3-position (tandem center) solenoid valve with Posi-CHeck®
Application: Double-acting cylinders.
Actuation: Solenoid operated, 115 volt, 50/60 Hz.
Functions: Push button control of "advance," "hold" and "return." The "Posi-Check®" feature guards against pressure loss when shifting from "advance" to "hold." With valve in "hold" position, cylinder ports are blocked and oil is directed from pump to reservoir.
NOTE: Do not allow return tank pressure to exceed 35 bar at the valve.
No. 9514 – 4-way/3-position (tandem center) solenoid valve, 115 volt, 50/60 Hz. Remote hand control included. Wt., 4,6 kg.
No. 9525 – Same as 9514 except for 230 volt, 50/60 Hz.
No. 9555 – Same as 9514 except for 24 volt, 50/60 Hz.
NOTE: Consult factory before installing a pressure switch on any of these valves.

⚠ **CAUTION: To prevent sudden, uncontrolled descent of a load as it is being lowered, use a No. 9596 Load Lowering Valve or No. 9720 Counter Balance Valve (see page 132) in conjunction with the directional valve used in your application.**

⚠ **CAUTION: The Posi-Check® feature will not hold the load when shifted directly A to B-B to A or from hold to A or B.**

NOTE: Maximum tank line pressure for remote mounted valves is 35 bar.

Valves
HYDRAULIC IN-LINE

700 bar,
19 l / min max flow rate

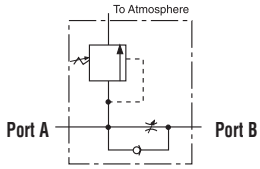

9596

LOAD LOWERING VALVE

Application: Precision metering for controlled cylinder piston return.

Operation: Permits free flow when extending cylinder, built-in pressure relief and "Posi-Check® " locks and holds load in raised position until operator opens valve. May be pre-set to provide consistent metered return, or operator may select rate of return with each actuation. Has 3/8" NPTF ports.

NOTE: Pressure relief valve setting is 830 bar. Operating pressure is 700 bar and max. flow rate is 19 l /min.

No. 9596 – Load lowering valve. Wt., 1 kg.

9597

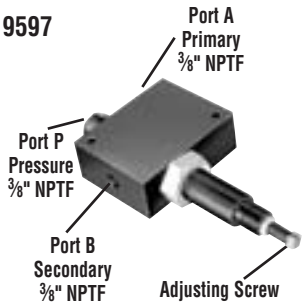

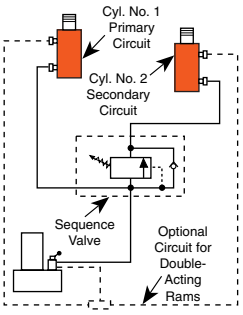

SEQUENCE VALVE

Application: Used when one cylinder in a multi-cylinder application must advance before any other.

Operation: Pump is connected to port "P" and separate cylinders to ports "A" and "B". When pressure is applied to port "P", cylinder "A" advances. Cylinder "B" will not advance until a predetermined pressure setting is reached in cylinder "A". Pressure setting is adjustable from 35 to 550 bar with adjustment screw; factory preset at 70 bar. Has 3/8" NPTF ports.

No. 9597 – Pressure control sequencing valve. Wt., 2,5 kg.

9608

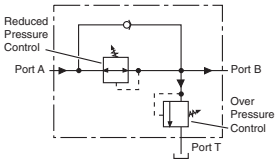

⚠ **CAUTION:** Over Pressure control must be set at a higher value than operating pressure.

PRESSURE REDUCING VALVE

Application: Provides complete, independent pressure control to two or more clamping systems operated by a single power source.

Operation: Can be used to provide different pressures in various stages of a single system. Virtually zero leakage across valve means each system can be operated by a single continuous pressure source. Adjustable from 70 to 350 bar at outlet port "B" (secondary). Has 1/4" NPTF ports.

No. 9608 – Pressure reducing valve. Wt., 2,6 kg.

9720
9721

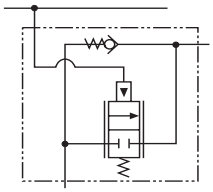

COUNTER BALANCE VALVE

Application: : Double-acting cylinders. Provides positive holding and controlled, "chatter-free" lowering of a load.

Operation: Load is raised at flow rate of pump, and held when pump is shut off. When the pump is shifted to "retract", the counter balance valve will continue to hold the load until system pressure exceeds pressure caused by load. The load can then be lowered smoothly to the flow rate of the pump. The counter balance valve is designed to operate with pumps having a high pressure flow rate of up to 1,9 l /min. and cylinder ratios of 3 to 1.

No. 9720 – Counter balance valve, including two male and two female half two hydraulic hoses, fittings and dust caps. Wt., 4,5 kg.

No. 9721 – Same as 9720, but does not include couplers, hoses, fittings and dust caps. Wt.,4,2 kg.

⚠ **CAUTION:** The 9720 patented counter balance valve has a pilot pressure as high as 210 bar. Because this pressure is applied to the rod end of the cylinder while it is already under load, the system should not be sized for loads greater than 80% of cylinder rated capacity.

⚠ **CAUTION:** To prevent sudden, uncontrolled descent of a load as it is being lowered, use a No. 9596 Load Lowering Valve or No. 9720 Counter Balance Valve in conjunction with the directional valve used in your application. See above, this page.

Shut-off valve

Application: This needle valve permits fine metering of hydraulic oil.
Operation: Can be used for controlling multiple single-acting cylinders.
No. 9575 – Shut off valve with 3/8" NPTF ports. Wt., 0,6 kg.

9575

Check valve

Application: Permits flow of hydraulic oil in one direction only.
Operation: Installs right in hydraulic line.
No. 9580 – Check valve with 3/8" NPTF male ends. Wt., 0,2 kg.

9580

Pilot operated check valve

Application: For use with open or tandem center valves. Permits free flow of fluid in one direction.
Operation: Flow is blocked in opposite direction until pilot oil pressure is applied. This prevents the loss of pressure if the valve is inadvertently shifted or the pump line is broken. Minimum cracking pressure is 4,1 bar. Required pilot pressure is approximately 16% of checked system pressure.
No. 9581 – Pilot operated check valve with 3/8" NPTF ports. Wt., 1,7 kg.

9581

"In-line" pressure relief valve

Application: Single- or double-acting cylinders. For remote locations in a hydraulic circuit where maximum pressure requirements are less than basic overload valve setting in pump.
Operation: Adjustable from 70 to 700 bar. Valve is spring-loaded and direct-acting.
No. 9623 – Pressure relief valve with 3/8" NPTF ports. Wt., 0,9 kg.

9623

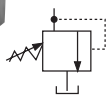

Metering valve

Application: For systems using large cylinders or extended lengths of hydraulic hose.
Operation: Controls surges by restricting flow if it exceeds 26,5 l / min. When flow subsides, valve reopens automatically. Has 3/8" NPTF male end to thread into return port of system control valve, and a 3/8" NPTF female end, permitting return hose to be directly connected.
No. 9631 – Metering valve. Wt., 0.1 kg.

9631

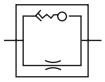

"In-line" pressure regulator valve

Application: Single- or double-acting cylinders. Permits adjusting operating pressures at various values below relief valve setting of pump.
Operation: Regulator valve is easily adjusted to maintain pressures between 20 and 700 bar. Maintains a given pressure setting within 3% over repeated cycles. Flow range is 0,3 l/ min to 23 l / min.
No. 9633 – In-line pressure regulator valve with two 3/8" NPTF inlet ports, one 1/8" NPTF tank port and 1 m drain line kit. Wt., 0,9 kg.
Simply turn the handle clockwise to increase the pressure setting, counter-clockwise to reduce pressure.
Note: 1 m Drain Line Kit is included.

9633

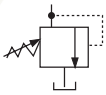

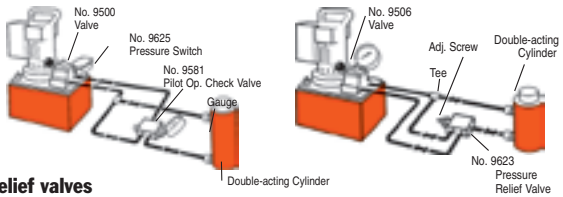

Relief valves

Application: Provide an economical means of protecting an hydraulic circuit against over pressurization.
Operation: These factory preset valves are designed for maximum flow rate of 19 l / min. Furnished with 1/8" NPTF male port. All valves weigh 0.1 kg. See chart to the right for ordering information.

1/8 NPT

RV21278 Series

Valve Order No.	Pressure Setting (bar)	Valve Order No.	Pressure Setting (bar)
RV21278	697/738	**RV21278-52**	366/407
RV21278-6	41/44	**RV21278-55**	386/428
RV21278-10	62/69	**RV21278-57**	400/442
RV21278-15	103/117	**RV21278-60**	421/462
RV21278-20	131/152	**RV21278-65**	455/497
RV21278-28	186/207	**RV21278-70**	490/531
RV21278-30	207/235	**RV21278-75**	524/566
RV21278-32	214/228	**RV21278-80**	559/600
RV21278-35	241/262	**RV21278-83**	580/621
RV21278-40	283/310	**RV21278-86**	600/642
RV21278-43	304/331	**RV21278-88**	614/662
RV21278-48	338/366	**RV21278-90**	628/669
RV21278-50	352/393		

Preset — Non-Serviceable

NOTE: Care should be exercised to protect workers from hot, pressurized hydraulic oil. Install these valves only in an enclosed or shielded area.

SHOP MAINTENANCE

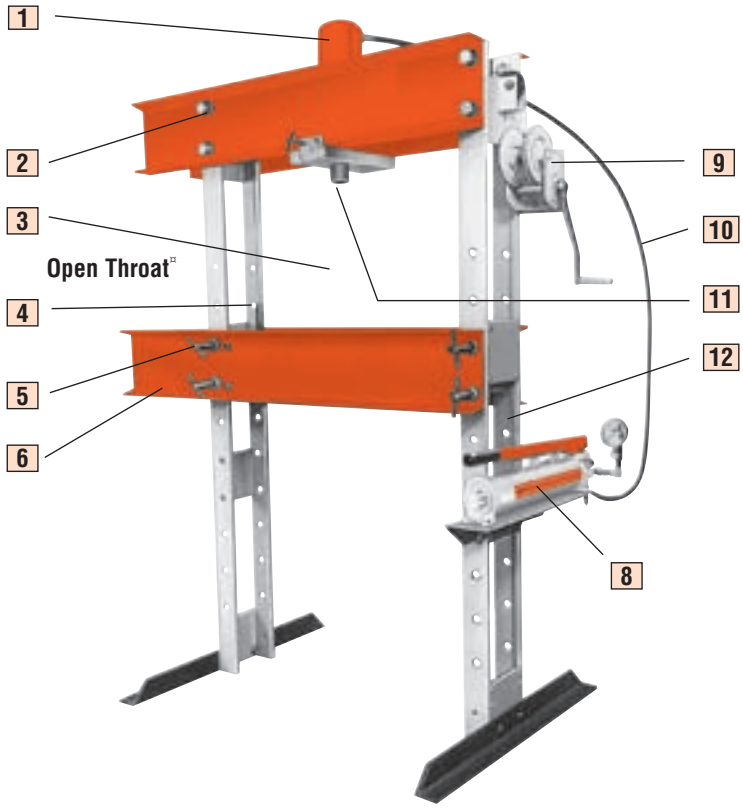

THE UNIQUE BENEFITS OF THE POWER TEAM PRESS

ALL SHOP PRESSES AVAILABLE IN CE

1 **2 TO 1 SAFETY FACTOR** on hydraulic cylinders and they meet ASME B30.1 standards. Cylinders are easily removed for other applications. Single- or double-acting cylinders are available; built-in relief valve on double-acting cylinders.

2 **FULL RATED CAPACITY** across width of upper frame, even with workhead moved to one side. (Heavy-duty presses only.)

3 **LARGER WORK AREA** than most competitors' models.

4 **ALIGNMENT LEVER** for simple pin replacement after raising or lowering the bed.

5 **CLOSE MANUFACTURING TOLERANCE** allows even load distribution over four alloy steel pins; not two, like some competitors. (Heavy-duty presses only.)

6 **OPEN THROAT® FEATURE** on 25 ton press provides additional work area by mounting cylinder on outside for C-frame advantage.

7 **FRAMES CAN BE USED HORIZONTALLY** for pressing jobs on extra-long shafts (see photo on next page).

8 **ELECTRIC, AIR OR HAND HYDRAULIC PUMPS** are available. All are standard Power Team pumps. **CE approved electric pumps are standard on all presses. Externally adjustable relief valve** for precise operator control of working pressure is standard on all electric pumps except PE10 and PE17 series. **24 volt hand switch** for remote control on pumps equipped with solenoid valves.

9 **ONE-MAN OPERATION** for bed adjustment. Winch unit quickly raises or lowers bed to desired height. Self-locking winch mechanism prevents bed from dropping when handle is released.

Horizontal pressing capabilities

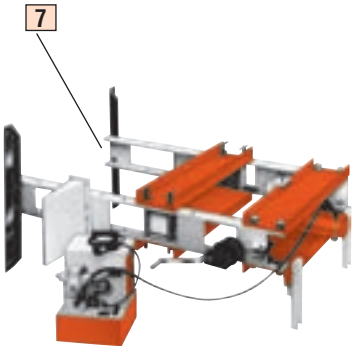

10 **9,5 MM I.D. HOSE** on spring return cylinders on heavy-duty presses provides up to six times faster cylinder return than standard 6,4 mm I.D. hose.

11 **FAST CYLINDER APPROACH** to work provided by 2-speed hand, air or electric pumps.

12 **RUGGED UPRIGHTS,** 50 percent stronger than channel iron. Four post design means open side for easy loading of long material.

NOTE: Certain features do not apply to Power Team 10 ton, Roll-Bed, or economy presses.

NOTE: Certain press applications may require guarding. Because of the multitude of possible press uses, it is impossible to design a guard that will meet every customer need. The end user must provide their own guarding where the situations dictate.

IMPORTANT SAFETY INFORMATION:

Power Team has protective blankets available which may afford protection from injury to users and others should part breakage occur. Power Team recommends the use of these blankets for all pushing, pulling, pressing, and lifting applications. See page 217 for additional information.

Shop Press
C FRAME

25 Tons
Press

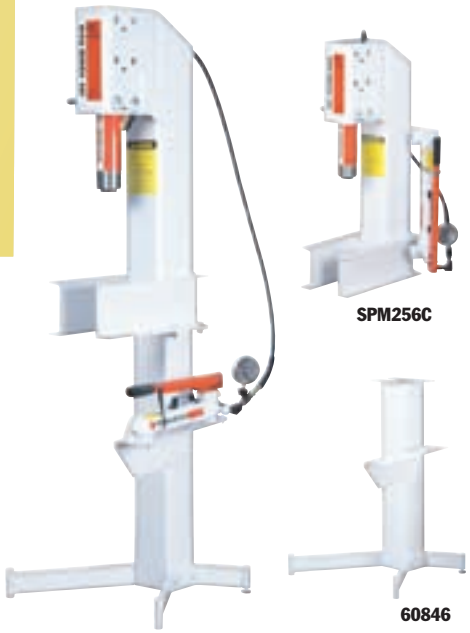

- Can be bench mounted or on optional pedestal base.
- Bench mount requires less than 1.4 sq. m. of space; on optional pedestal, only 4 sq.m. of floor space is needed.
- "Open Throat" design makes loading and unloading of work easy.
- Cylinder head adjusts to three convenient working positions, providing up to 514 mm of "daylight."
- Hydraulic cylinder delivers a 159 mm stroke, is driven by a P59 two-speed hand pump.
- **Pedestal Base No. 60846** – Provides a stable base for SPM256C. Includes a bracket for mounting the pump on the side of pedestal press. Wt., 34,5 kg.

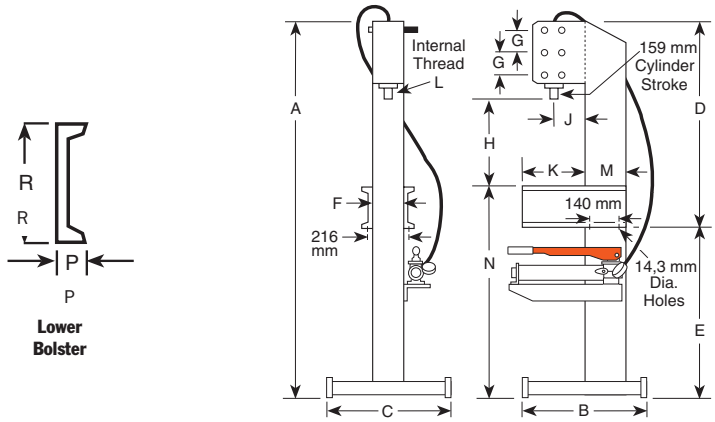

DIMENSIONS

A (mm)	B (mm)	C (mm)	D (mm)	E (mm)	F (mm)	G (mm)	H (Cyl. Retracted) (mm)	J (mm)	K (mm)	L (mm)	M (mm)	N (mm)	P (mm)	R (mm)	Floor Space (mm)
1.972	622	610	1.057	914	152	127	260, 387, 514	165	318	1 1/2 – 16	203	1.092	51	178	610 x 622

CE

ORDERING INFORMATION

Capacity (tons)	Type Cyl. Used	Stroke (mm)	Cyl. Model	Order No.	Speed** Advance	Pressing	Type Pump	Pump Model	Prod.Wt. (kg)
25	Single-Acting	159	C256C	**SPM256C***	3,3 mm/stroke	0,8 mm/stroke	Hand	P59	108

*** SPM256C does not include No. 60846 pedestal base.**
**** Typical performance based on pump specifications. Actual speeds may vary with operating conditions.**

POWER TEAM

Shop Press
H FRAME

10 Tons
Bench/Floor Press

- Ideal for small pressing jobs; repairing small motors, armatures, removing and installing gears, bearings, other press-fit parts.
- Bench press has 391 x 457 mm work area; floor press bed height is adjustable from 127 mm to 1.041 mm with horizontal "daylight" of 553 mm.
- Choices of power sources: single-speed hand pump, electric/hydraulic or air/hydraulic.
- Hydraulic gauges, hoses and fittings included.

PUMP ELECTRICAL SPECIFICATIONS

PE10 Series – 220 volt, 50 cycle, single phase.

CE

SP1010A

SPM1010

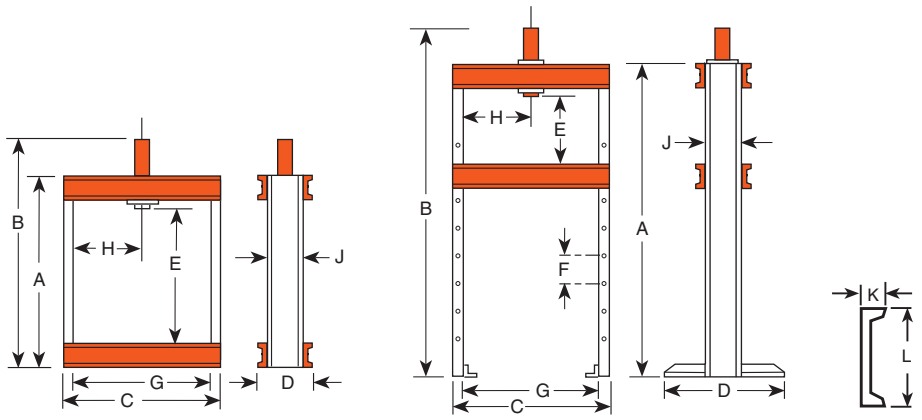

DIMENSIONS

Frame	A (mm)	B (mm)	C (mm)	D (mm)	E (mm)	F (mm)	G (mm)	H (mm)	J (mm)	K (mm)	L (mm)	Bench Space (mm)	Floor Space (mm)
Bench	622	841	641	182	391	—	559	279	102	40	102	182 x 641	—
Floor	1.499	1.718	641	711	127-1.041	152	559	63,5-470*	102	40	102	—	711 x 730

*Lateral head movement

ORDERING INFORMATION

Frame	Cap. (tons)	Type of Cyl. Used	Stroke	Cylinder Model	Order No.	Speed (mm./min.)††† Advance	Pressing	Type Pump	Pump Model †	Prod. Wt. (kg)
222481 Bench	10	Single-Acting	257	C1010C	**SPM1010**	1,5 mm/stroke		Hand	P55	41,2
222480 Floor	10	Single-Acting	257	C1010C	**SPH1010**	1,5 mm/stroke		Hand	P55	77,5
222480 Floor	10	Single-Acting	257	C1010C	**SPE1010**	55,7	5,1	Elec. ††	PE172-E220	79,3
222480 Floor	10	Single-Acting	257	C1010C	**SP1010A**	93,7	7,6	Air	PA9H	78,1
222480 Floor	10	Double-Acting	254	RD1010	**SPE1010D**	55,7	5,1	Elec. ††	PE174-E220	87,0

† Optional air/hydraulic pumps available on request.
†† "Advance" position holds pressure with motor shut off. "Return" position advances cylinder with motor running and returns cylinder with motor shut off.
††† Typical performance based on 7 bar and 700 bar pump specifications. Actual speeds may vary with operating conditions.

PRESS ACCESSORIES
Page 144-145

Press
H FRAME

Open Throat & Economy Press 25 Ton

Presses

OPEN THROAT PRESSES

- Design permits use as both "H" frame and "C" frame press; cylinder can be mounted on frame extension to handle jobs which won't fit between uprights.
- Open throat press models are also available with remote control to enable the operator to view work from all sides with fingertip control of cylinder piston travel.
- Off-center pressing loads of full capacity can be applied across entire width of frame.

ECONOMY PRESSES

- Rugged, yet reasonably priced. Handles many "big press" tasks, and perfect for many of the "in-between" jobs you see almost daily. (Note: stroke length limited to 159 mm on economy models.)

FEATURES OF BOTH OPEN THROAT AND ECONOMY PRESSES

- Press bed height easily adjustable with winch. Bed will not drop when handle is released.
- Choice of power sources for rapid cylinder advance: two-speed hydraulic hand pump, electric/hydraulic or air/hydraulic.

PUMP ELECTRICAL SPECIFICATIONS

PE17 Series – 0,37 KW, 220 volt, 50 cycle, single phase.

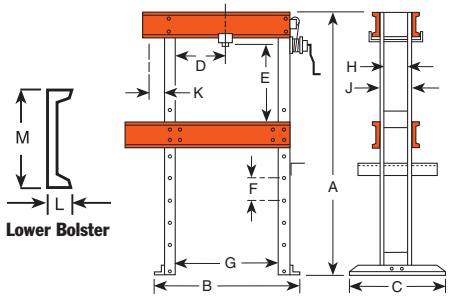

Open Throat feature enables cylinder to be mounted on outside of press frame for fast bearing removal and more.

CE

SHOP EQUIPMENT

DIMENSIONS

A (mm)	B (mm)	C (mm)	D* (mm)	E (mm)	F (mm)	G (mm)	H (mm)	J (mm)	K (mm)	L (mm)	M (mm)	Floor Space (mm)
1.727	1.092	711	76-737	175-1.102	114	813	140	165	178	64	203	1.092 x 711

*Lateral head movement

ORDERING INFORMATION

Cap. (tons)	Type of Cylinder Used	Stroke (mm)	Cylinder Model	Order No.	Speed (mm/min.)†† Advance	Speed (mm/min.)†† Pressing	Type Pump	Valve Type	Pump‡ Model	Prod.Wt. (kg)
"Open Throat" presses										
25	Single-Acting	362	C2514C	**SPA2514**	249	30	Air	2-Way Foot	PA6	309
25	Single-Acting	362	C2514C	**SPM2514**	12,4 mm/ stroke	0,8 mm/ stroke	Hand	Load - Release	P159	314
25	Single-Acting	362	C2514C	**SPE2514**	1.184	84	Elec.	2-Way††	PE172-E220	301
25	Single-Acting	362	C2514C	**SPE2514S**	1.321	102	Elec.	3-Way†	PE172S-E220	344
25	Double-Acting	362	RD2514	**SPE2514DS**	1.321	102	Elec.	4-Way†	PE174S-E220	357
"Economy" presses										
25	Single-Acting	159	C256C	**SPA256**	249	30	Air	2-Way Foot	PA6	197
25	Single-Acting	159	C256C	**SPM256**	3,0 mm/ stroke	0,8 mm/ stroke	Hand	Load - Release	P59	205
25	Single-Acting	159	C256C	**SPE256**	1.184	84	Elec.	2-Way††	PE172-E220	210

† Solenoid valve with 12 volt remote control hand switch.
†† Holds pressure with motor shut off. Also has an automatic dump setting. Furnished with a 3.1m remote motor control.
††† Typical performance based on 7 bar and 700 bar pump specifications. Actual speeds may vary under operating conditions.
‡ Pump standard with press. Other Power Team pumps can be substituted.
dBA at idle and 700 bar: PE172–67/81 dBA; measured at 0,9 m distance, all sides.

POWER TEAM

Press
H FRAME

55 Ton
Presses

- Full off-center pressing at full rated capacity across width of upper frame without buckling or bending.
- Maximum "daylight" is 1067 x 914 mm, making positioning of even bulky work pieces easy.
- Height of press bed is easily adjusted with winch; friction brake prevents bed from dropping and handle from spinning upon release.
- Presses with single-acting cylinder offer choice of 2-speed hand operated, electric/hydraulic, or air/hydraulic pump. Models with double-acting cylinder have an electric/hydraulic pump.
- Press models equipped with remote control enable operator to view work from all sides with fingertip control of cylinder piston travel.
- Press can be used horizontally for special applications with user-supplied support legs.

PUMP ELECTRICAL SPECIFICATIONS

PE17 Series – 0,4 Kw, 220 volt, 50 cycle, single phase.

Hydraulic gauge and hydraulic fittings are included with presses.

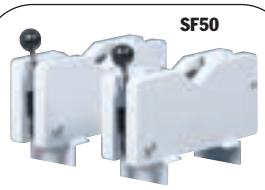

No. SF50 – Straightening fixtures for use with 55-ton shop or 80-ton Roll-Bed® presses (2 ea.). Wt., 47,2 kg. **Not part of press, order separately.**

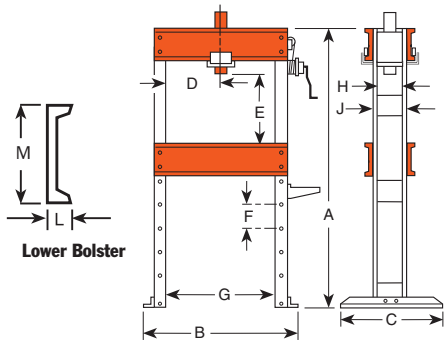

CE

DIMENSIONS

A (mm)	B (mm)	C (mm)	D* (mm)	E (mm)	F (mm)	G (mm)	H (mm)	J (mm)	L (mm)	M (mm)	Floor Space (mm)
1.829	1.232	914	83-832	152-1.067	152	914	171	203	76	305	1.232 x 914

*Lateral head movement

ORDERING INFORMATION

Cap. (tons)†	Type of Cylinder Used	Stroke (mm)	Cylinder Model	Order No.	Speed (mm/min.)†† Advance	Speed (mm/min.)†† Pressing	Type Pump	Valve Type	Pump‡ Model	Prod.Wt. (kg)
55	Single-Acting	159	C556C	**SPA556**	114	12,7	Air	2-Way Foot	PA6	318
55	Single-Acting	159	C556C	**SPM556**	5,8 mm/ stroke	0,4 mm/ stroke	Hand	Load-Release	P159	323
55	Single-Acting	337	C5513C	**SPM5513**	18,9 mm/ stroke	0,7 mm/ stroke	Hand	2-Way	P460	435
55	Single-Acting	159	C556C	**SPE556**	551	38	Elec.	2-Way††	PE172-E220	333
55	Single-Acting	337	C5513C	**SPE5513**	551	38	Elec.	2-Way††	PE172-E220	444
55	Single-Acting	337	C5513C	**SPE5513S**	620	48	Elec.	3-Way†	PE172S-E220	478
55	Double-Acting	333	RD5513	**SPE5513D**	551	38	Elec.	4-Way	PE174-E220	450
55	Double-Acting	333	RD5513	**SPE5513DS**	1.679	137	Elec.	4-Way†	PE554S-E220	505

* Frame is shipped assembled.
† Solenoid valve with 24 volt remote control hand switch.
†† Holds pressure with motor shut off. Also has an automatic dump setting. Furnished with a 3,1 m remote motor control.
††† Typical performance based on 7 bar and 700 bar pump specifications. Actual speeds may vary with operating conditions.
‡ Pump standard with press. Other Power Team pumps can be substituted. dBA at idle and 700 bar: PE172—67/81; measured at 0,9 m distance, all sides.

PRESS ACCESSORIES
Page 144-145

H Frame Presses

100 Ton
Presses

SHOP EQUIPMENT

- Cylinder workhead glides across upper frame on rollers, locks in place for off-center pressing jobs. May be used horizontally for special pressing applications with user-supplied supports.
- Press bed is raised and lowered by winch which locks in place for insertion of bed retaining pins. Upper bolster can be lowered 203 mm for convenient positioning on repetitive jobs.
- Generous "daylight" of 1.067 x 1.270 mm accommodates bulky work pieces, uprights are placed for easy side entry of bars or shafts for straightening or bending.
- Choice of single- or double-acting cylinder. Hydraulic pump options include: 2-speed hand pump with large 7,6 l reservoir, PE172 electric/hydraulic pump or "PQ" series "Quiet" electric/hydraulic pump with low noise level.

Hydraulic gauge and hydraulic fittings are included with presses.

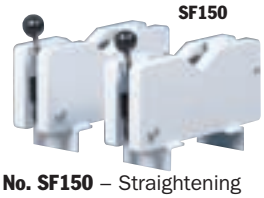

No. SF150 – Straightening fixtures for use with 100-ton shop press and 100-, 150-, and 200-ton RollBed® presses (2 ea.). Wt., 89 kg. **Not part of press, order separately.**

PUMP ELECTRICAL SPECIFICATIONS

PE17 Series – 0,4 KW, 220 volt, 50 cycle, single phase.
PQ120 Series – 2,2 kW, 380 V, 50 cycle, three phase.

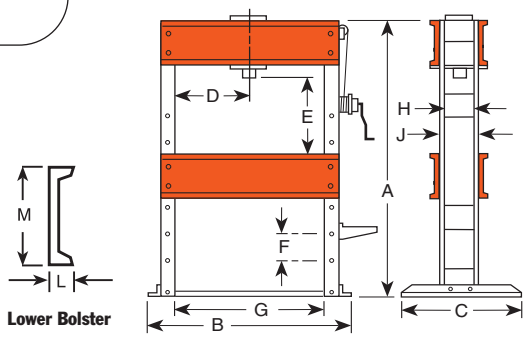

CE

DIMENSIONS

A (mm)	B (mm)	C (mm)	D* (mm)	E (mm)	F (mm)	G (mm)	H (mm)	J (mm)	L (mm)	M (mm)	Floor Space (mm)
1.962	1.626	914	178-1.092	51-1.067	203	1.270	203	254	86	381	914 x 1.988

*Lateral head movement

ORDERING INFORMATION

Cap. (tons)†	Type of Cyl. Used	Stroke (mm)	Cylinder Model	Order No.	Speed (mm/min.)†† Advance	Speed (mm/min.)†† Pressing	Type Pump	Valve Type	Pump‡ Model	Prod. Wt. (kg)
100	Single-Acting	260	C10010C	**SPM10010**	9,0 mm/ stroke	0,3 mm/ stroke	Hand	3-way	P460	769
100	Single-Acting	260	C10010C	**SPE10010**	889	74	Elec.	3-way	PE552-E220	813
100	Single-Acting	260	C10010C	**SPE10010R**	292	20	Elec.	2-way	PE172-E220	766
100	Double-Acting	333	RD10013	**SPE10013DS**	889	147	Elec.	4-way*	PQ1204S-E380	854

† Frame is shipped assembled. *Solenoid valve with 24 volt remote control hand switch.
†† Typical performance based on 7 bar and 700 bar pump specifications. Actual speeds may vary under operating conditions.
‡ Pump standard with press. Other Power Team pumps can be substituted.
dBA at idle and 700 bar: PE172—67/81; PQ120—73/78. Measured at 0,9 m distance, all sides.

POWER TEAM®

H Frame Presses

150-200 Ton
Presses

- Standing 2,3 m tall, these giants handle the really big jobs. May be used horizontally for special pressing applications with user-supplied supports.
- Workhead has wide horizontal travel; rugged press frame withstands load of rated capacity across full width of frame.
- Winch mechanism provides easy positioning of press bed, locks in place for insertion of retaining pins. Upper bolster can be lowered 279 mm for convenient positioning on repetitive jobs.
- Uprights are placed for easy side entry of bars or shafts for straightening or bending.
- Fast cylinder approach is provided by PQ1204S "Quiet" electric/hydraulic pump. Has remote control hand switch, enabling operator to view work from all sides with fingertip control of cylinder piston travel.

PUMP ELECTRICAL SPECIFICATIONS

PQ120 Series – 2,24 KW, 380 volt, 50 cycle, three phase.

Hydraulic gauge and hydraulic fittings are included with presses.

CE

SHOP EQUIPMENT

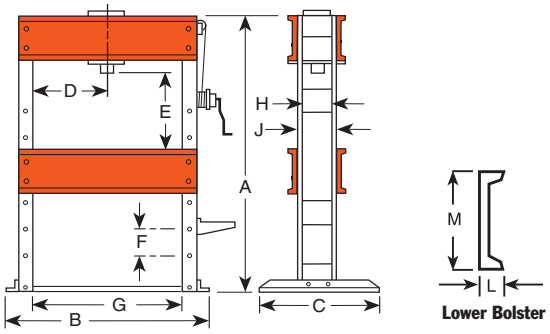

DIMENSIONS

A (mm)	B (mm)	C (mm)	D* (mm)	E (mm)	F (mm)	G (mm)	H (mm)	J (mm)	L (mm)	M (mm)	Floor Space (mm)
2.286	1.803	1,118	279-991	228-1.111	279	1.270	318	381	105	457	1.117 x 1.803

*Lateral head movement

ORDERING INFORMATION

Capacity (tons)†	Type of Cylinder Used	Stroke (mm)	Cylinder Model	Order No.	Speed (mm/min.)†† Advance	Speed (mm/min.)†† Pressing	Type Pump	Valve Type	Pump Model***	Prod. Wt. (kg)
150	Double-Acting	333	RD15013	**SPE15013DS**	610	99	Electric	4-way**	PQ1204S-E380	1.366
200	Double-Acting	333	RD20013	**SPE20013DS**	457	74	Electric	4-way**	PQ1204S-E380	1.484

† Frame is shipped assembled.
†† Typical performance based on 7 bar and 700 bar pump specifications. Actual speeds may vary under operating conditions.
** Solenoid valve with 24 volt remote control hand switch.
*** Pump standard with press. Other Power Team pumps can be substituted. dBA at idle and 700 bar: 73/78, measured at 0,9 m foot distance, all sides.

PRESS ACCESSORIES
Page 144-145

Roll-Bed® Press

80-200 Ton
H Frame

CE

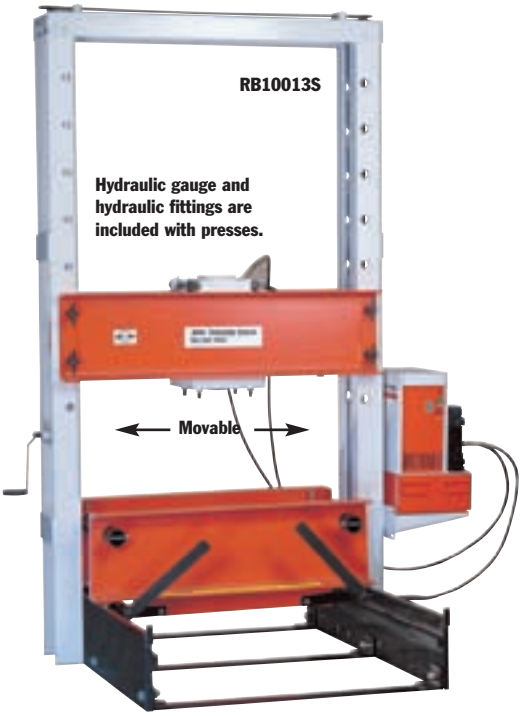

SHOP EQUIPMENT

Heavy-Duty Straightening Fixtures

No. SF50 – Fixtures for use with 80-ton Roll-Bed® presses or 55-ton heavy-duty shop presses. (2 ea.). Wt. 47,2 kg. **Not part of press, order separately.**

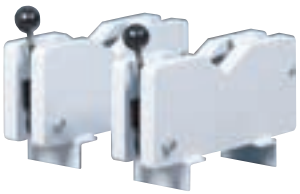

No. SF150 – Fixtures for use with 100-, 150- and 200-ton Roll-Bed® presses and 100-ton shop presses only (1 pr.). Wt.89 kg. **Not part of press, order separately.**

- The original, patented Roll-Bed® design. Bed rolls out for easy loading and unloading with a crane or other lifting device.
- Movable workhead glides easily side-to-side for full off-center load capacity across width of upper frame.
- "Daylight" is 1.283 x 1.524 mm for 80- and 100-ton models; 1.302 x 1.625 mm on 150- and 200-ton presses.
- Fast approach of double-acting, 334 mm stroke cylinder is provided by PQ1204S "Quiet" electric/ hydraulic pump with remote control hand switch. Operator can view work from all sides with fingertip control of cylinder piston travel.

PRESS FEATURES:

- **Roll-Bed® design** – Bed glides in or out on bearings to make loading and unloading fast and easy.
- Adjustable lower bed width – For secure balancing and centering of heavy jobs. Loosen adjusting bolts to adjust bed from 102 to more than 686 mm. See dimension "H."
- **Movable workhead** – For off-center pressing jobs, workhead moves on bearings across upper bolster. Presses can be used at full capacity, regardless of where workhead is placed.
- **Lifting mechanism** – Simply turn crank handle to raise or lower upper bolster. Screw mechanism raises or lowers both sides evenly (a heavy-duty 1/2" drill motor can replace handle for automatic adjustment). Four locking pins hold bolster in place for pressing.
- **Optional heavy-duty straightening fixtures** – Make straightening jobs easy and accurate to within 0.1 mm! Rollers are ball bearing mounted and handle raises or lowers for easy turning of the work.

PUMP ELECTRICAL SPECIFICATIONS

PQ120 Series – 2,24 KW, 380 volt, 50 cycle, three phase.

NOTE: Different voltage and valve options can be obtained by substituting certain PA, PE or PQ series pumps. Consult the factory.

POWER TEAM®

Lifting screw and locking pins make bolster raising a one-man job.

Bearings make bed positioning smooth and easy.

Lever lowers bed for pressing, raises it for rolling.

CE

Cylinder is easily moved across width of upper bolster.

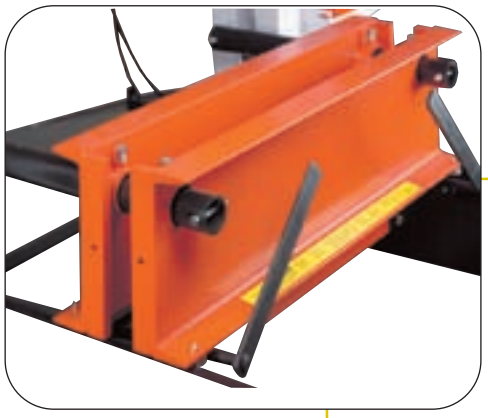

Width adjusts from 102 mm to over 686 mm; is secured with locking bolts.

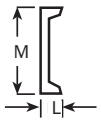

Lower Bolster

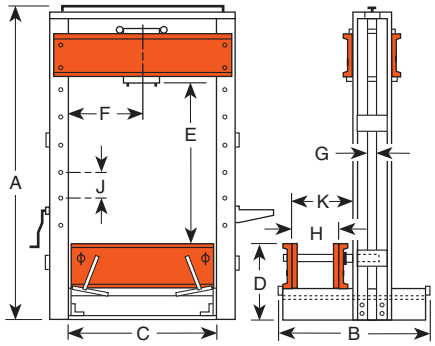

DIMENSIONS

Cap (Tons)	A (mm)	B (mm)	C (mm)	D (mm)	E (mm)	F (mm)	G (mm)	H (mm)	J (mm)	K (mm)	L (mm)	M (mm)	Floor Space (mm)
80	2.861	1.632	1.283	686	305-1.524	368-914	76,2	102-692	203	927	86	381	1.632-1.537
100	2.861	1.632	1.283	686	305-1.524	368-914	76,2	102-692	203	927	86	381	1.632-1.537
150	3.131	1.734	1.302	762	229-1.626	352-949	76,2	102-689	279	946	105	457	1.734-1.607
200	3.131	1.734	1.302	762	229-1.626	352-949	76,2	102-689	279	946	105	457	1.734-1.607

ORDERING INFORMATION

Capacity (tons)†	Type of Cylinder Used	Stroke (mm)	Cylinder Model	Order No.	Speed (mm/min.)†† Advance	Pressing	Type Pump	Valve Type	Pump‡ Model	Prod. Wt. (kg)
80	Double Acting	333	RD8013	**RB8013S**	1.168	190	Elec.	4-way*	PQ1204S-E380	1.307
100	Double Acting	333	RD10013	**RB10013S**	889	147	Elec.	4-way*	PQ1204S-E380	1.334
150	Double Acting	333	RD15013	**RB15013S**	610	99	Elec.	4-way*	PQ1204S-E380	2.019
200	Double Acting	333	RD20013	**RB20013S**	457	74	Elec.	4-way*	PQ1204S-E380	2.059

* Solenoid valve with 24 volt remote control hand switch.
† Frame is shipped assembled.
‡ Pump standard with press. Other Power Team pumps can be substituted. dBA at idle and 700 bar: PQ120-73/78; measured at 0,9 mdistance, all sides.
†† Typical performance based on 7 bar and 700 bar pump specifications. Actual speeds may vary with operating conditions.

PRESS ACCESSORIES
Page 144-145

Shop Press
ACCESSORIES

Rubber Tire Removing/Installing set
Now an easy way to press solid rubber tires. The TPP200 uses plates instead of combination rings to press a rim from an old tire into a new one. Plates are stacked so none is more than 50,8 mm smaller than the one under it to keep the plates from bending. They can be used on any Power Team press with 55-ton capacity or more. NOTE: Many tires require 100 tons of force or more, depending on tire size and condition. These plates withstand max. force of 150 tons.
No. TPP200 – Tire press plate set. Includes 13 press plates, spacer pushing adapter and press bed plate. For use on solid rubber tires from 102 mm to 451 mm I.D.

Set No. TPP200

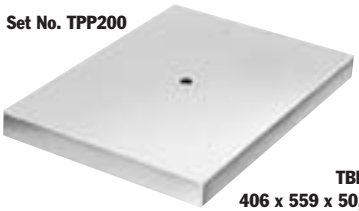

TBP1622
406 x 559 x 50,8 mm

TPP1 – TPP13
98,4 x 448 x 19,1 mm

TPS6
95,3 x 152,4 mm

Order No.	Set No. TPP200 Tire Size I.D. (mm)	Plate O.D. (mm)
TPP1	102	98,4
TPP2	127	123,8
TPP3	152,159	149,2
TPP4	165	161,9
TPP5	203	200
TPP6	254	250,8
TPP7	267	263,5
TPP8	286	282,6
TPP9	305,308	301,6
TPP10	356	352,4
TPP11	381	377,8
TPP12	406	403,2
TPP13	451	447,7
TPS6	Spacer/Pushing Adapter	82,6 x 152,4
TBP1622	Bed Plate	406 x 559 x51

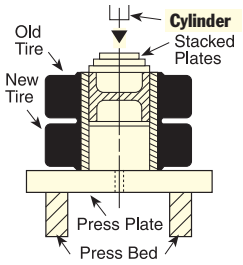

Pressing rim into new tire on Power Team Press.

SHOP EQUIPMENT

PRESS ACCESSORIES, "V" BLOCKS & THREADED ADAPTERS

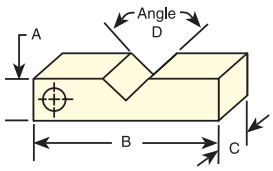

V-BLOCKS (mm)

Order No.	Width A (mm)	Length B (mm)	Thick C (mm)	Angle D
1890	50,8	228,6	31,8	120°
1891	63,5	292,1	44,5	120°
1892	88,9	355,6	50,8	120°
1893	127	355,6	38,1	120°
207395	146,1	584,2	63,5	120°

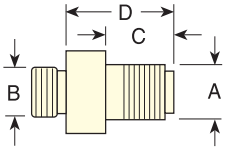

THREADED ADAPTER DIMENSIONS

Adapter No.	A	B	C (mm)	D (mm)
38597	1- 8	1- 8	19,1	33,3
38953	1 1/4 - 7	1 1/2 -16	69,9	111,1
37368	1 5/8 – 5 1/2	—	42,9	63,5
43562	2 1/4 - 12	—	57,2	76,2
38954	1 5/8 – 5 1/2	1 1/2 - 8	82,6	106,4
43563	2 1/4 - 12	2 3/4 -12	57,2	81
46070	2 1/4 - 12	2 – 4 1/2	57,2	81

Press Accessory Kit
Make your Power Team press even more versatile with one of these accessory sets. These sets will eliminate makeshift set-ups. Many of these items can be used with pullers you already have.

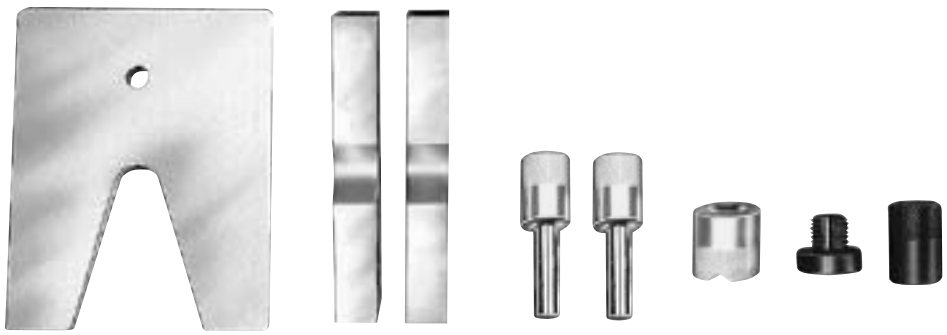

ORDERING INFORMATION

Use With Press:	Order No.	A V-Throat Press Plate	B V-Blocks	C Pushing Adapter ⚠	D Pushing Adapter ⚠	E V-Pushing Adapter	F Threaded Adapter Single-Acting Cyls.	F Threaded Adapter Double-Acting Cyls.	G Pushing Adapter
10 Ton	**SPA10**	1888	1890 (Pr.)	**201923** 12,7 mm dia. shank	**201454** 19 mm dia. shank	34806	Included in Set 38597	— 38597	
25 Ton	**SPA25**	1889	1891 (Pr.)	**34510** 19 mm dia. shank	**34511** 25,4 mm dia. shank	34807	Included in Set 38953	— 38953	
55 Ton	**SPA55**	—	1892 (Pr.)	**34755** 25,4 mm dia. shank	**34756** 31,8 mm dia. shank	34808	Not Included Order Separately 37368	— 38954	
80/100 Ton	**SPA100**	—	1893 **(Pr.)	—	— 43562	36469 43563	Not Included Order Separately 43562 46070 ***	43563 46070	21332
150/200 Ton	**SPA200**	—	207395 (Pr.)	—	**44458** 57,1 mm dia. shank	44457	None* —	—	—

*** Pushing adapters thread directly into RD15013 and RD20013 cylinders.**
**** V-blocks, No. 1893, are recommended for use with 80-ton Roll-Bed® press. Not recommended for use with 100-ton Roll-Bed®.**
***** For 80-ton Roll-Bed® press.**
NOTE: Individual press accessories may be ordered separately.

⚠ **CAUTION: Pushing adapters are designed for use with specific shaft sizes, and depending on the condition of the shaft ends, the adapter may not withstand the full press tonnage. Always use a protective blanket or other suitable guard when pressing.**

Mobile Floor Cranes

1000- 2000 kg

1000 kg and 2000 kg capacity with space-saving fold-away feature

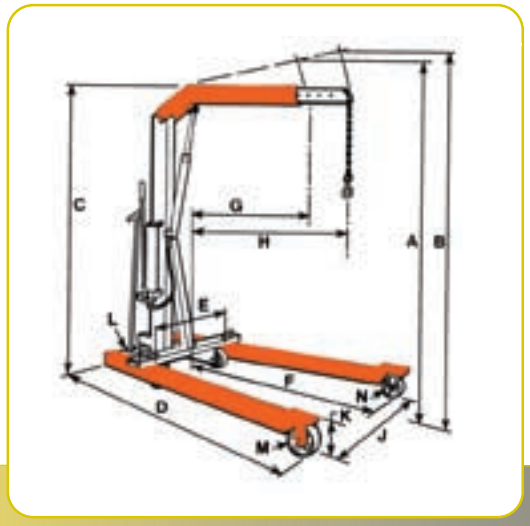

- Adjustable legs spread to clear obstacles, telescoping boom for extra reach. Rugged construction, reliable hydraulics.
- Boom collapses completely and legs fold for compact storage.
- 2-speed hydraulic hand pump provides fast boom travel and precise operator controlled descent.
- Roller bearing wheels and a steering dolly provide ease of mobility. Lifting chain is included.

No. FC4400 – 2000 kg cap. crane with fold-away feature, adj. leg spread, lifting chain and 2-speed hand pump. Wt. 293 kg.

DIMENSIONS

	FC2200*	FC4400*
Cap., boom ret. (kg)	1.000	2.000
Cap., boom ext. (kg)	750	1.500
A Max. boom hgt., ret (mm)	2,718	2.819
B Max. boom hgt., ext.(mm)	2.972	3.099
C Overall hgt., boom horiz.(mm)	2.032	2.083
D Overall length (mm)	2.108	2.261
E Min. throat width (mm)	610	635
F Inside leg length (mm)	1.372	1.461
G Eff. boom reach -ret.(mm)	838	902
H Eff. boom reach -ext. (mm)	1.219	1.238
J Inside leg width (mm)	610-914-1.219	660-1.016-1.333
	(3 –position)	**(3 –position)**
K Leg height (mm)	203	241
L Dolly wheel diameter(mm)	127	127
M Wheel diameter (mm)	152	203
N Caster diameter (mm)	152	152
space, folded (mm)	686 x 965	787 x 1.067
Height, folded (mm)	2.007	2.184

*** Frame shipped unassembled.**

Load-Rotors®
TILTERS

908-2720 kg

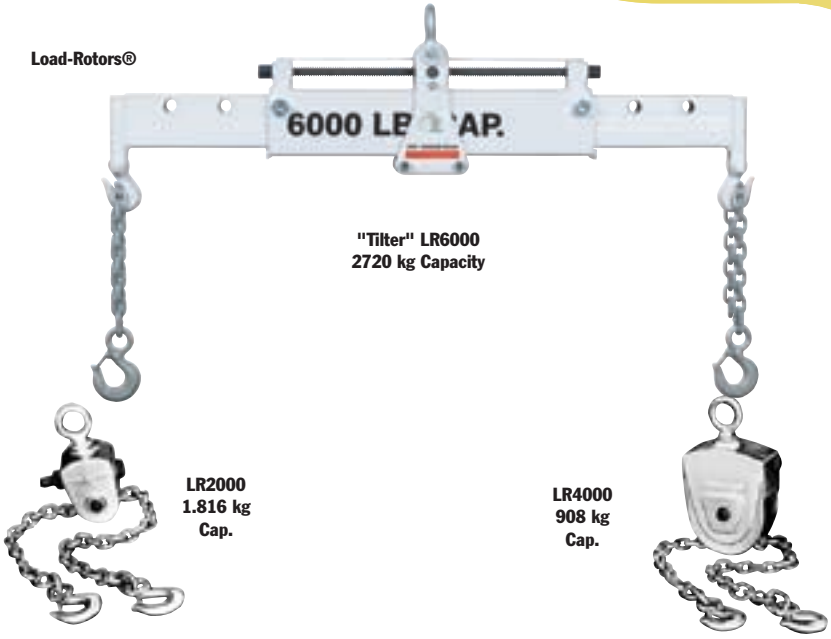

- For lifting or positioning components, Power Team's heavy duty lifting slings are just right.
- The heavy-duty Load-Rotors®, when used with a crane or hoist, greatly reduce time and effort.
- A self-locking worm and gear set in the Load-Rotor® head permits rapid angle adjustment of the component being handled.
- Whenever you have big, heavy components to move or position, nothing helps you get the job done easier and faster than the 2.720 kg "Tilter."

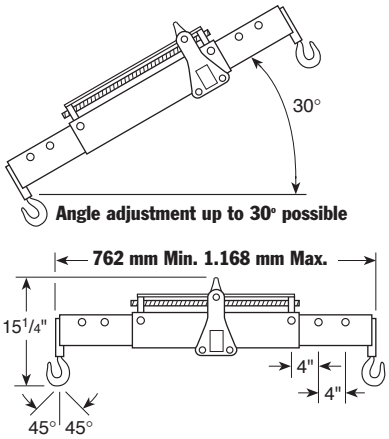

Angle adjustment up to 30° possible

The working length is adjustable in three positions from 762 mm to 1.168 mm. Maximum chain angle is 45°.

ORDERING INFORMATION

Capacity (kg)	Order No.	Chain Size (mm)	Chain Lg. W/ Swivel Hooks (mm)	Lifting Eye Opening (mm)	Hex Drive End (in)	Gear Ratio	Product Wt. (kg)
2000	**LR2000**	6,4	1.422	31,8	5/8	34:1	4,1
4000	**LR4000**	7,9	1.650	44,5	5/8	82:1	10,4
6000	**LR6000**	7,9	1.650	41,3	5/8	82:1	33,1

JACKS

			STROKE (MM)													
Series	Description	Pg	1,1 Ton	2 Ton	3 Ton	3,6 Ton	5 Ton	5,5 Ton	6 Ton	7 Ton	8 Ton	10 Ton	11 Ton	12 Ton	13 Ton	15 Ton
	Bottle Jack Std	140		114	114		120				120			149		156
	Bottle Jack Low Profile	141												95		
	Toe Jacks Std	142						210					235			
	Toe Jacks Economy	143		124			124					149				
	Bottle Jacks Telescoping	144							305				262		254	181
	Bottle Jacks Sidewinder	145					19/38					30				
SJ	Post Tension/Stressing Jacks	147														
IJ	Inflatable Jacks	148	68			119				160				224		
PL	High Tonnage Portable Jack RR	150														
PM	High Tonnage Portable Jack	152														

20 Ton	22 Ton	23,8 Ton	27,5 Ton	30 Ton	33 Ton	34 Ton	46,3 Ton	50 Ton	55 Ton	60 Ton	74,6 Ton	100 Ton	110 Ton	150 Ton
159	156			159	143			171					155	
86				79										
			233											
30														
216/254				216/254										
		305				355	416				521			
										355		355		
									333			333		333

Bottle Jacks

2-110 Ton
Portable
hydraulic power

Industrial lifting and pushing applications.

JACKS

- Choose from this complete line of premium–quality, standard bottle jacks. Ideal for use in any number of industrial lifting and pushing applications.
- The 9110B, 9015B, 9022B and 9033B feature a beveled base which allows the jack to “follow” the load, reducing the chance of dangerous side-loading.
- Many jacks feature screw extensions and all can be used in the vertical, angled or horizontal positions.
- Serrated or contoured saddles help stabilize the load for a safer lift.
- All jacks meet ASME B30.1 standards and carry the Power Team Marathon Lifetime Warranty.
- 110-ton jack features dual pumps for time-saving two-speed operation.

ORDERING INFORMATION

Cap. Tons	Stroke (mm)	Order Number	Retracted Height Min. (mm)	Length of Screw Ext. (mm)	Height w/Screw Ext. (mm)	No. Pump Strokes to Ext. Piston completly	Saddle Dia. (mm)	Base Size (mm)	Pump Handle Length (mm)	Handle Effort at Rated Cap. (kg)	Carry Handle	Metric tons at 700 (bar)	Product Weight (kg)
2	114	**9002A**	181	49	344	5	25	110x65	311	34	No	1,8	2,2
3	114	**9003A**	191	60	365	10	29	114x72	489	20,4	No	2,7	2,6
5	121	**9005A**	200	70	391	12	35	132x76	545	24,9	No	4,5	3,6
8	121	**9008A**	200	70	391	18	38	152x89	605	34	No	7,3	5,5
12	149	**9112A**	241	79	470	26	48	165x106	605	27,2	Yes	10,9	7,9
15	156	**9015B**	230	110	495	27	60	130x140†	700	40,8	No	13,6	8,3
20	159	**9120A**	270	40	429	22	51	183x129	800	31,7	Yes	18,1	12,9
22	156	**9022B**	240	110	505	36	60	165x160†	700	40,8	Yes	20,0	10,7
30	159	**9030A**	279	—	438	35	60	192x141	1.000	22,7	Yes	27,2	18,7
33	143	**9033B**	240	100	483	56	65	184x176†	700	39,9	No	29,9	14,5
50	171	**9050A**	305	—	476	35	76	237x187	1.000	38,6	Yes	45,4	35,4
110	156	**9110B**	300	—	456	40/160‡	111	339x291	700	35,8	Yes	99,8	70

† Comes with a Beveled Base

‡ 2 Speed: Rapid advance≈40 strokes; Lift mode≈160 strokes

POWER TEAM

Low Profile
BOTTLE JACKS

12, 20 & 30 Ton

The right choice for those lower clearance jobs.

JACKS

- All the quality, features and lifting capacity of the standard jacks in short form. The 12-ton and 20-ton models feature screw extensions for added versatility.
- All jacks meet ASME B30.1 standards and carry the Power Team Marathon Lifetime Warranty.
- All jacks operate both vertically and horizontally for use in a variety of lifting, pushing and spreading applications.

ORDERING INFORMATION

Cap. Tons	Stroke (mm)	Order Number	Retracted Height Min. (mm)	Length of Screw Ext. (mm)	Height w/Screw Ext. (mm)	No. Pump Strokes to Ext. Piston (mm)	Saddle Dia. (mm)	Base Size (mm)	Pump Handle Length (mm)	Handle Effort at Rated Cap. (kg)	Carry Handle	Metric tons at 700 bar	Product Weight (kg)
12	95	**9012A**	171	76	343	26	48	165x106	605	27	Yes	10,9	6,4
20	86	**9020A**	181	40	305	22	51	183x129	800	32	Yes	18,1	10,1
30	79	**9130A**	181	—	260	35	60	192x141	1.000	23	Yes	27,2	13,7

† 2 Speed: Rapid advance≈40 strokes; Lift mode≈160 stroke

Toe Jacks

5.5, 11 & 27.5 Ton

Get under equipment with only 27 mm of ground clearance.

ASME B30.1

JACKS

- With lifting points on the toe and on the top, these extremely rugged jacks are ideal for machine lifting, rigging, lift truck service and much more.
- Choose from 5.5-ton, 11-ton, and now, an amazing 27.5-ton lifting capacity.
- All jacks operate both vertically and horizontally.
- Base, toe and pumping assembly swivel independently, allowing the jack to work in confined areas.

The J Series Toe Jack is an extremely rugged jack used here for lift truck service.

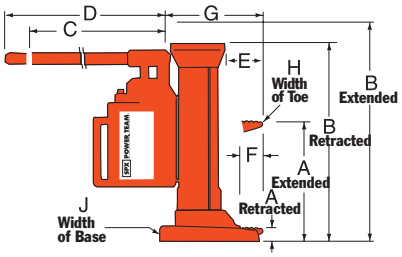

DIMENSIONS

Order Number	A Ret. (mm)	A Ext. (mm)	B Ret. (mm)	B Ext. (mm)	C (mm)	D (mm)	E (mm)	F (mm)	G (mm)	H (mm)	J (mm)
J58T	30	238	375	584	368	451	71	56	176	41	130
J109T	30	264	419	654	368	451	76	56	183	64	171
J259T	54	289	505	738	210	756	146	102	267	89	270

ORDERING INFORMATION

Cap. Tons	Max Lift Stroke (mm)	Order Number	Strokes to Extend Piston 25,4 mm	Handle Effort at Max Load (kg)	Carry Handle	Metric tons at 700 bar	Product Wt. (kg)
5½	210	**J58T**	8	38,1	Yes	5,0	19,5
11	235	**J109T**	13	40	Yes	10,0	29
27½	233	**J259T**	21	40	Yes	24,9	92,1

POWER TEAM

Economy
TOE JACKS

2, 5 & 10 Ton

Just the power you need at a price you can afford.

- These bottle jack-style toe jacks are loaded with many of the same features as our standard bottle jacks, but the toe-lift feature and swiveling pump handle socket make them ideal for machinery lifting and positioning.
- An internal pressure relief provides added safety by limiting the jack's lifting capability to the capacity of the toe.
- Spring return is an added feature on the larger jacks.
- Swiveling pump handle assembly available on the 5- and 10-ton models. The swiveling jack assembly allows you to access and pump the unit from numerous positions.

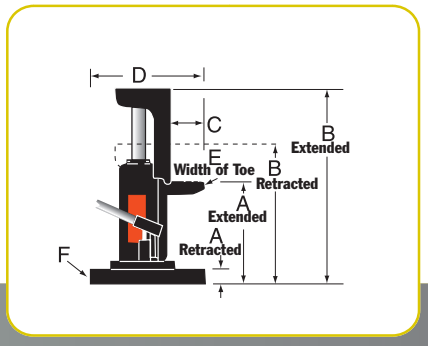

DIMENSIONS

Order Number	A Ret. (mm)	A Ext. (mm)	B Ret. (mm)	B Ext. (mm)	C (mm)	D (mm)	E (mm)	F (mm)
J24T	16	140	232	356	47,5	181	51	125
J55T	25	149	292	476	47,5	257	76,2	184,2
J106T	32	181	327	476	64	292	100	241

ORDERING INFORMATION

Cap. Tons	Max Lift Stroke (mm)	Order Number	Strokes to Extend Piston 25 mm	Handle Effort at Max Load (kg)	Carry Handle	Metric tons at 700 bar	Product Wt. (kg)
2	121	**J24T**	14	19	Yes	1,8	8,3
5	121	**J55T**	22	27	Yes	4,5	24
10	146	**J106T**	31	33	Yes	9,1	38

Bottle Jacks
TELESCOPING

6-15 Ton

These jacks offer greater extended lifting capability.

JACKS

ASME B30.1

- Telescoping jacks offer all of the quality features and capabilities of the standard bottle jack line with a bonus. The super-long stroke of these jacks saves time and effort by eliminating the need to lift, crib, lift, etc. In most applications, the user can place the jack once and complete the lift.
- The 9015X offers very low clearance capability, making it the ideal choice for forklift maintenance or machine lifting.
- The taller 9006X, 9011X and 9013X all feature a unique beveled base that allows the jack to "follow" the load laterally as it is raised, greatly reducing side-loading of the piston.

ORDERING INFORMATION

Cap. Tons	Stroke (mm)	Order Number	Retracted Height Min. (mm)	Length of Screw Ext. (mm)	Height w/Screw Ext. (mm)	No. Pump Strokes to Ext. Piston 25,4 mm	Saddle Dia. (mm)	Base Size Beveled Base (mm)	Pump Handle Length (mm)	Handle Effort at Rated Cap. (kg)	Carry Handle	Metric tons at 700 bar	Product Weight (kg)
6	305	**9006X**	216	—	521	14	44	121 x 133	700	36	No	5,4	6,4
11	262	**9011X**	200	68	530	25	41	160 x 165	700	40	No	10,0	8,8
13	254	**9013X**	230	84	570	35	48	176 x 186	700	36	Yes	11,8	11,3
15	181	**9015X**	170	70	419	32	52	143 x 194	600	43	Yes	13,6	12

POWER TEAM

Sidewinder Jacks
MINI JACKS

5-20 Ton

Compact Sidewinder Mini Jack fits in your palm and delivers 5, 10 & 20 tons of lifting force.

ASME B30.1

- Retracted height of just 63,5 mm for the smallest jack and 130,2 mm for the 20 ton, allows you to slip this jack into the narrowest of crevices.
- Jacks operate either horizontally or vertically. Handles function in line with base for easier use in confined spaces.
- The perfect addition to any toolbox, this remarkable little jack has multiple uses that are limited only by your imagination. Use it as a jack or a spreader. Use it to turn your mechanical gear puller (puller capacity must match jack capacity) into a hydraulic puller. Use it vertically or horizontally in limited clearance.

ORDERING INFORMATION

Cap. Tons	Stroke (mm)	Order Number	Retracted Height Min. (mm)	Max Height (mm)	No. Pump Strokes to Ext. Piston 25 mm	Saddle Dia. (mm)	Base Size Dia. (mm)	Pump Handle Length (mm)	Handle Effort at Rated Cap. (kg)	Carry Handle	Metric tons at 700 bar	Product Weight (kg)
5	19	**9105A**	63,5	85,7	30	29	73,8	240	26	No	4,5	1,9
5	38	**9205A**	88,9	130,2	38	29	73,8	240	26	No	4,5	2,4
10	30	**9210A**	120,7	149,2	36	42,1	109,9	440	28	No	9,1	5,5
20	30	**9220A**	130,2	160,3	46	52,8	119,9	605	35	No	18,1	8,0

Maintenance Sets

Hydraulic system components

IM10E

IM10H

JACKS

APPLICATION FLEXIBILITY

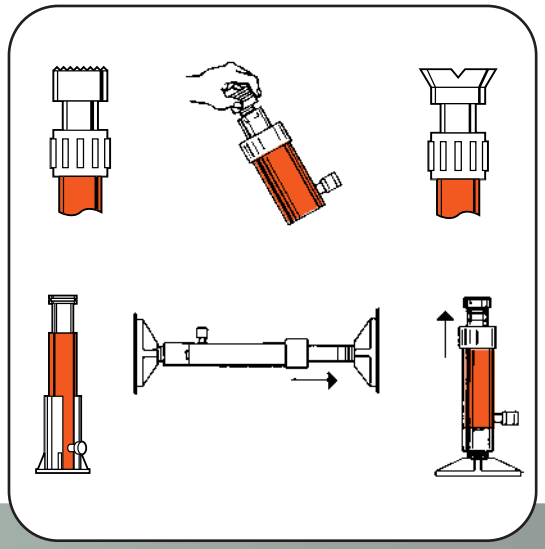

- Matched hydraulic system components, adapters and hydraulic spreader, contained in a rugged carrying and storage case.
- Portable sets are ideal for pushing, pulling, lifting, straightening, or clamping at remote job sites.
- Cylinders in set are rated at 10 tons at 700 bar. Set components are designed for full rated capacity of cylinders.
- Set IM10H includes hand operated pump. Set IM10E includes the Quarter Horse® electrically driven portable power unit.

ORDERING INFORMATION

CONTENTS OF SET **NO. IM10E**

Description	Order No.
Hydraulic spreader	HS2000
Hand pump (electric)	PE102
700 bar hyd. gauge	9041
Tee adapter	9670
Hose & coupler assembly	9754
90° V base	25395
Threaded coupler	25664
Serrated saddle	31772
Flat base	32325
Extension rod – 127mm length	350897
Extension rod – 254 mmlength	38909
Extension rod – 457 mm length	350898
Cyl. support base	420062
Cyl. ass'y, 10 ton, 257 mm stroke	C1010CBT
Cyl. ass'y, 10 ton, 156 mm stroke	C106CBT
Storage box	350722
Prod. Weight – 48,1 kg.	

CONTENTS OF SET **NO. IM10H** / **NO. IM10L** NEW

Description	Order No.	Order No.
Hydraulic spreader	HS2000	HS2000
Hand pump	P59	P59L
700 bar hyd. gauge	9041	9041
Tee adapter	9670	9670
Hose & coupler assembly	9754	9754
90° V base	25395	25395
Threaded coupler	25664	25664
Serrated saddle	31772	31772
Flat base	32325	32325
Extension rod - 127mm length	350897	350897
Extension rod - 254mm length	38909	38909
Extension rod - 457mm length	350898	350898
Cyl. support base	420062	420062
Cyl. ass'y, 10 ton, 156mm stroke	C106CBT	C106CBT
Storage box	350722	350722
	Prod. Weight 40,4 kg.	Prod. Weight 36,8 kg.

SJ2010
SJ3010

SJ2010DA
SJ3010DA

Post Tension
& STRESSING JACKS

20 & 30 Ton

- Power Team Monostrand Stressing Jacks are the most durable in the industry.
- Ideally suited for work on slab-on-grade where dirt, heat and high volume use take their toll.
- Available in single- or double-acting models.
- Standard single-acting units have a 254 mm stroke. Other stroke lengths are available on special order.
- Dead-end seaters for production work and field work available on special order.
- Service repair is simple; components are long lasting and easily replaced.
- 76,2 mm detachable seater nose assembly easily replaced with optional 152,4 mm nose assembly.
- The jack of choice for high-rise and elevated work, thanks to fast return time and light weight.
- All hydraulic fluid controls are interior designed; more efficient and safer operation during tensioning and retraction.
- Standard double-acting units have an 216 mm stroke; others available on special order.
- Specially designed Power Team Control Valves are available for post tensioning jacks. See pages 51.

ORDERING INFORMATION

Description	Cyl. Cap. Tons	Stroke (mm)	Order Number	Recommended Pumps for this Stressing Jack	Oil Capacity (l)	Strand Diameter (mm)	Seater Type	Tons at 700 bar	Weight (kg)
Post tension jack with spring seater, 12,7 mm strand.	20	254	**SJ2010**	PE554T/PE604T	0,72	11,1-12,7	Spring	20,3	25
Post tension jack with power seater, 12,7 mm strand.	20	254	**SJ2010P**	PE604PT	0,72	11,1-12,7	Power	20,3	25
Double-acting post tension jack with power seater, 12,7 mm strand.	20	215	**SJ2010DA**	PE554PT/PE604PT	0,85	11,1-12,7	Power	23,9	19
Post tension jack with spring seater, 15,2 mm strand.	30	254	**SJ3010**	PE554T/PE604T	1	11,1-15,2	Spring	28,5	34,5
Post tension jack with power seater, 15,2 mm strand.	30	254	**SJ3010P**	PE604PT	1	11,1-15,2	Power	28,5	34,5
Double-acting post tension jack with power seater, 15,2 mm strand.	30	215	**SJ3010DA**	PE554PT/PE604PT	1,1	11,1-15,2	Power	36,0	23,5

STRESSING JACK ACCESSORIES AND HOSES–ORDERING INFORMATION

Used with Stressing Jack	76,2 mm Nose Piece	76,2 mm Wedge Seater	152,4 mm Nose Piece	152,4 mm Wedge Seater	9,5 mm Diameter Gripper Set	11,1 mm Diameter Gripper Set	12,7 mm Diameter Gripper Set	15,2 mm Diameter Gripper Set	Replacement Gripper Handle	Gripper Retainer Plate (2 used)
SJ2010	252564	252562	252759	252763	252568	252761	252567	NA	252570	252565
SJ2010P	252564	252562	252759	252763	252568	252761	252567	NA	252570	252565
SJ2010DA	252543	252542	252760	252764	252650	252762	252555	NA	252556	252544
SJ3010	252564	252562	252759	252763	252568	252761	252567	252569	252570	252565
SJ3010P	252564	252562	252759	252763	252568	252761	252567	252569	252570	252565
SJ3010DA	253363	253361	253364	253362	253390	NA	253391	253365	252556	252544

No. 9758E Hose – 3,1 m rubber, wire-braid (2-ply, 2.800 bar burst rating) 3/8" NPTF male hose ends
No. 9763E Hose – 3,1 m rubber, wire-braid (2-ply, 2.800 bar burst rating) 3/8" x 1/4" NPTF male hose ends

TECH DATA
Page 237

Inflatable Jack

1-74 Ton

IJ Series Inflatable Air Jacks

The non-skid space age reinforced inflatable jack is perfect for many applications.

JACKS

- Highly flexible and lightweight jacks only require an air supply of 8 bar maximum. Any non-explosive gas or water can also be used for inflation.
- Uninflated jacks are only 25,4 mm thick, making seemingly impossible lifting tasks routine.
- Space age reinforced, multi-layer aramid construction, widely overlapping on all sides. Tested at 8 bar.
- In rugged testing, jacks withstood tens of thousands of inflate/deflate cycles at 12 bar.
- Large surface area and material flexibility allow jacks to lift loads on soft or compressible surfaces without support cribbing being necessary.
- Safety first! The controller, shut-off and air hoses are all equipped with USA industrial interchange style air couplers. Female half coupler bodies have a locking collar, protecting operator from accidentally disconnecting jack while under load.
- Surface of jack has a non-skid pattern, assuring that the jack won't "walk away" from the job. Jacks can be used to lift a load from an uneven surface, are tolerant of side-loaded applications.
- Non-conducting material resists oil, ozone and most chemicals. Cold resistant down to -40° C, heat resistant up to 115°C(short term) or 93°C(long term).
- Field-replaceable nipples are made of tough steel, with internal thread to prevent abrasion damage. Ideal needle aperture of 6,4 mm allows rapid inflation, without risk of icing, and permits a safe lowering speed.
- Single jack controller with "dead man" control (350090). Can be used individually, or in multiples to regulate any number of jacks desired.
- Heavy attachment straps are provided on 4 largest sizes for attachment of a rope or hook to position the jack from a safe distance.
- Inflation hose system is color-coded (red and yellow) for easy recognition when using more than one jack.

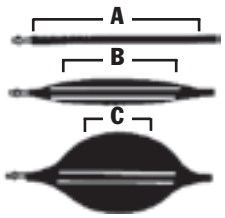

Maximum Effective Lifting Area

All lifting capacities mentioned in the charts are measured at the maximum effective lifting area (A). As the jack is inflated (B), this effective area decreases (C) due to the rounded shape of the jack. Lifting capacity also decreases (see performance chart).

Stack up to two jacks together to increase effective lifting height.

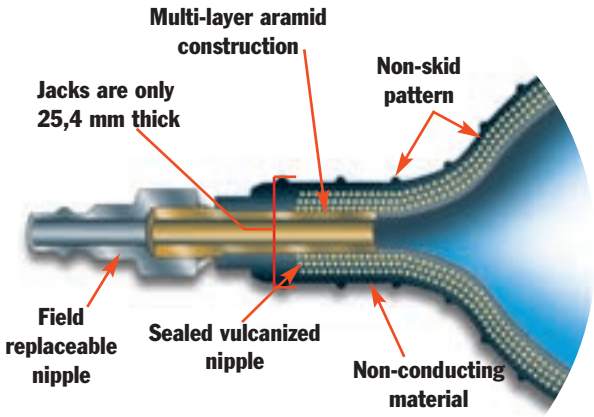

POWER TEAM

*** NOTE: 350090 air controller may be used individually to control one jack (see single line system), or in multiples to control additional jacks (see dual line system).**

No. 307159 – Pressure reducing valve. Allows use of bottled gases to operate jacks (works on CGA-580 Nitrogen/Argon/Helium bottles). Contains standard bottle fitting on inlet and 1/4" industrial interchange (female) outlet. Wt., 1,8 kg.

No. 350090 – Air controller for single jack. Equipped with relief valve and pressure gauge.

No. 350207 – Shut-off hose with shut-off valve and pressure relief valve. Includes a female and male quick coupler.

No. 350208 – Air hose. Red, 9,2 m long. Includes No. 250341 female and No. 250342 male quick coupler.

No. 350209 – Air hose. Same as 350208, except blue in color.

No. 250343 – Female quick coupler. 1/4" industrial interchange x 1/8" NPT female. Wt.,0,1kg.

No. 250353 – Male quick coupler. 1/4" industrial interchange x 1/8" NPT male. Wt., 0.1 kg

No. 250682 – Female quick coupler. 1/4" industrial interchange x 1/4" NPT male. Wt., 0.1 kg.

No. 15235 – Connector 1/8" NPT male x 1/4" NPT female. Wt., 0.1 kg

No. 250341 – Female quick coupler. 1/4" industrial x 9,5 mm I.D. hose.

No. 250342 – Male Quick coupler. 9,5 mm I.D. Hose.

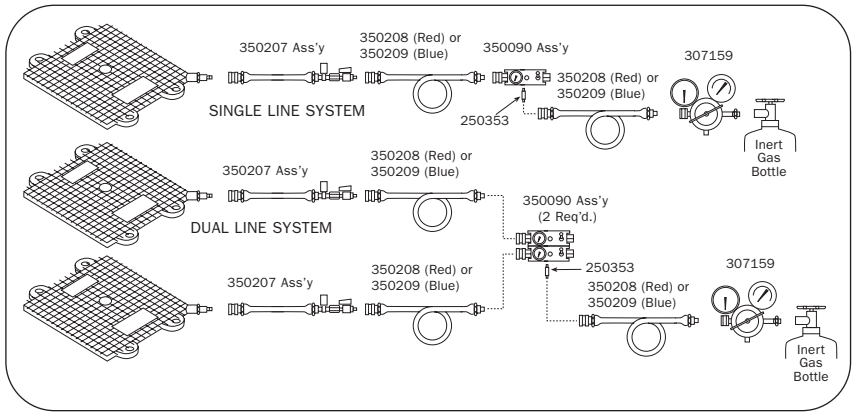

PERFORMANCE

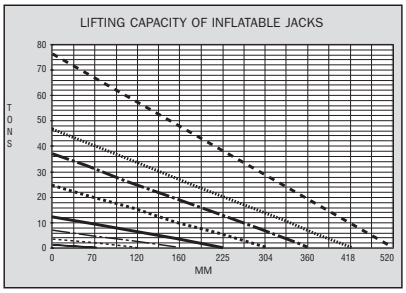

- IJ7320 - 74.6 ton capacity
- IJ4416 - 46.3 ton capacity
- IJ3213 - 34 ton capacity
- IJ2211 - 28.8 ton capacity
- IJ128 - 12 ton capacity
- IJ76 - 7 ton capacity
- IJ45 - 3.6 ton capacity
- IJ13 - 1.1 ton capacity

ORDERING INFORMATION

Lifting Cap. (tons)	Lifting Height (mm)	Order Number	Air Contents at 8 bar (l)	Max. Working Pressure (bar)	Length (mm)	Width (mm)	Collapsed Height (mm)	Product Weight (kg)
1,1	70	**IJ13**	2,3	8	140	130	25,4	0,5
3,6	120	**IJ45**	14,4	8	255	200	25,4	1,2
7	160	**IJ76**	42	8	305	305	25,4	1,9
12	225	**IJ128**	97	8	400	400	25,4	3,6
23,8	304	**IJ2211**	268	8	550	550	25,4	7,3
34	360	**IJ3213**	463	8	650	650	25,4	9,9
46,3	418	**IJ4416**	729	8	750	750	25,4	13,1
74,6	520	**IJ7320**	1.457	8	950	950	30,4	26,3

Portable
HIGH TONNAGE JACKS

60-100 Ton
Railroad Edition

Portable & compact, ideal for locomotive and railcar maintenance.

JACKS

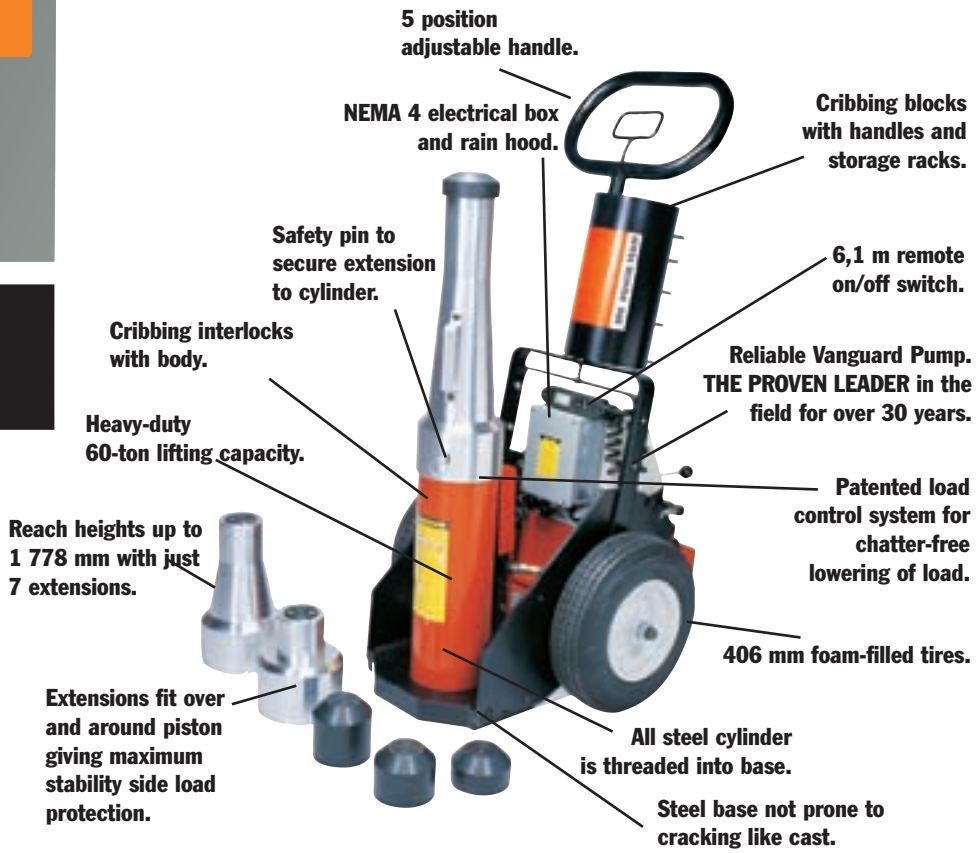

- Patented load lowering valve. Lowers load smoothly and safely. Eliminates dangerous chatter and bounce.
- Full range of rod extensions. Jack comes fully equipped with extensions to match lifting pad heights on most rolling stock. Max. lifting height to 1 778 mm .
- Low collapsed height, long stroke. 610 mm collapsed height for low-clearance lift pads.360 mm stroke for maximum lift.
- Adjustable, ergonomic handle. Handle tilts to start the job and is easily locked/unlocked without moving from operating position.
- NEMA 4 electrical box and rain hood. Pump motor and controls protected from water. Quiet operation.
- Cribbing block set with handles and convenient storage rack. Provides solid mechanical load holding.
- High-profile, low rolling resistance, foam-filled tires. Jack can be moved and positioned with minimal effort. No chance of downtime due to punctured tires.
- Electric and air motor options. Quiet, powerful air and electric motor powered units available.

POWER UNIT SPECIFICATIONS

Order No.	Motor	Power Req.	Motor Control	Valve Function	Power Cord	dBa at 700 bar
PLE6014-220	0,84 kW, 220 VAC***, 50 Hz Single Phase	12 amps	6,1 m Remote Control	Lift Hold Lower Manual	Pigtail	80/95
PLA6014-220	Rotary Air Powered	1,4 cu.m at 6 bar	6,1 m Remote Air Control	Lift Hold Lower Manual	NA	82

*** For 110/115V-50/60 Hz order PLE6014

POWER TEAM

Electric Model
(PLE6014)

Air Model
(PLA6014)

CRIBBING BLOCKS (CBS60, INCLUDED)

Qty.	Height (mm)	Order Number
1	38,1	**351954**
4	76,2	**351953**

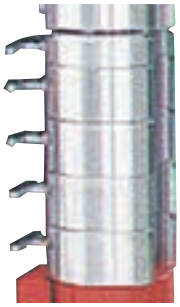

EXTENSIONS (PL60 EXT, INCLUDED)

Extension Length (mm)	Order Number	Extension Weight (kg)
25,4	**351931**	2,2
50,8	**351927**	4,0
76,2	**351928**	6,4
101,6	**351929**	8,7
127	**66053**	9,5
254	**66054**	13,8
508	**66055**	22,1

LIFTING RANGE

Lifting range (in 25,4 mm increments): 610 mm- 1.778 mm.

Only 3 extensions are needed to provide this range.

Do NOT exceed 1.778 mm lifting range on 60-ton unit or 1.489 mm on 100-ton unit.

ORDER INFORMATION

Capacity (Tons)	Stroke (mm)	Order Number	Retracted Height (mm)	Extended Ht. w/Extensions (mm)	Product Wt. Less Cribbing & Ext. (kg)
60	356	***PLE6014K**	610	1.778	237
60	356	***PLA6014K**	610	1.778	237
60	356	***PLE6014K-220**	610	1.778	237
100	356	**Consult Factory**	610	1.499	237

*Includes cribbing block set stored on jack handle rack, and 7 extensions (25,4; 50,8; 76,2; 101,6; 127; 254 and 308 mm)

PLE6014 = Jack, Electric, includes: Cart, Pump & Cylinder
PLE6014-220 = Jack, Electric (220 V.)
PLA6014 = Jack, Air, includes: Cart, Pump & Cylinder
CBS60 = Cribbing Block Set (5 cribbing blocks)
PL60EXT = Extension Set (Consists of 7 extensions)

Portable
HIGH TONNAGE

55, 100 & 150 Ton

Portable and compact, ideal for locomotive/railcar, mining and heavy equipment maintenance.

JACKS

- Modular design - pump and cart separate from cylinder and base.
- Three tonnage capacity options - 55-ton, 100-ton and 150-ton.
- Three collapsed height options – 660, 838 and 1,143 mm.
- Two standard power options - air (PA55) and electric (PE55).
- Two control options - remote motor control and remote valve/motor control.
- Accessory options – 168 mm extension, load-holding rings.
- Select the collapsed height to fit your most frequent application - add jacking modules to suit your needs.
- Remote operation for maximum operator safety and control - choose "motor only" or "motor and valve" control in the hand.
- Easy to maneuver - large tires and small "footprint" make it easy to scoot into the tightest quarters, then locate the exact lifting position.
- Adjustable, heavy-duty handle - makes this jack easy to move, position under vehicles. Can also be used to transport jack on site with a forklift.
- Load-holding rings (optional) - provide full rated mechanical load-holding capability.
- Cylinder extension (optional) - adds more versatility by extending your jack's reach.
- Low-temperature oil (optional) - provides smooth, reliable operation in the coldest climate conditions.
- Modular design - allows you to change lifting modules to suit your tonnage or height requirements. Use the pump module as a portable power station for your other double-acting cylinders (700 bar).
- Exclusive load-control system - provides positive, chatter-free control when lowering the load.
- Shielded and sheltered hydraulic lines - for safer, longer, trouble-free service.

ORDER INFORMATION
CRIBBING BLOCK SETS - INCLUDES ONE JACK MODULE EXTENSION

NEW

Order No.‡	55 Ton CBS55		100 Ton CBS100		150 Ton CBS150		200 Ton CBS200	
No. in Set	1	4	1	4	1	4	1	4
A	38,1	76,2	38,1	76,2	38,1	76,2	38,1	76,2
B	44,5	82,5	44,5	82,5	44,5	82,5	44,5	82,5
C	139,7	139,7	139,7	139,7	222,2	222,2	254	254
Jack Module Ext.	173		177,8		168,3		168,3	
Total Stack Ht.	515,9		520,7		512,2		512,2	
Product Wt. (kg.)	16,3		30,9		38,6		47,7	

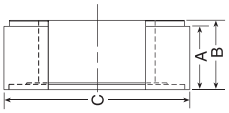

- Convert jack module into stable mechanical cribbing device.
- Increase retracted height up to 521 mm.

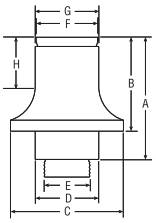

ORDER INFORMATION
JACK MODULE EXTENSIONS

(Tons)	No.	A (mm)	B (mm)	C (mm)	D (mm)	E (in.)	F (mm)	G (mm)	H (mm)	Prod. Wt. (kg)
55	**58945**	223,8	173	127	66,8	$1^{11}/_{16}$–8UN	63,5	66,8	92,2	9,5
100	**58943**	228,6	177,8	174,7	98,6	$2^{3}/_{4}$–12UN	95,3	98,6	95,3	18,2
150	**58944**	219,2	168,4	203,2	114,3	$3^{1}/_{4}$–8UNC	111,3	114,3	88,9	22,7

• Increases jack's reach.

POWER TEAM

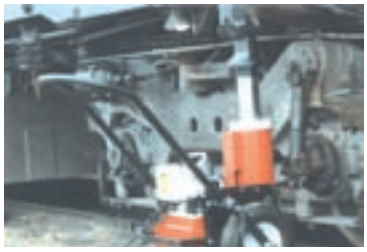

Air pump and cart module.

Electric pump and cart module.

Pump & cart modules

Pump and cart modules contain hydraulic pump, cart, remote control and all hoses and fittings required to connect to a jack module. Contact factory on folding handle cart option.

	Remote Control	
Pump	Motor Only	Motor & Valve
Air	PMA55	PMA55S
Electric	Consult Factory	PME55S

660 mm Jack Module

838 mm Jack Module

1143 mm Jack Module

Jack modules

Jack modules easily separate from the pump and cart module.

	Cylinder	Collapsed Height (mm)		
Tonnage	Stroke	660,4	838,2	1.143
55	333	JM25	JM35	JM45
100	333	JM210	JM310	JM410
150	460	JM215†	JM315	JM415
200	333	JM220*	JM320	JM420

* collapsed height; 711 mm and stroke 333 mm.
† stroke 333 mm.

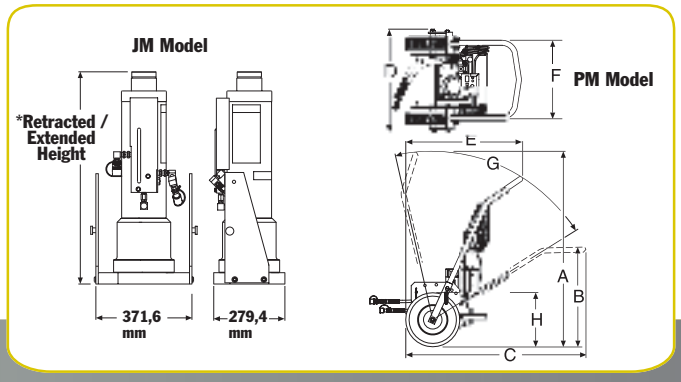

Dimensions								
Model Series	A	B	C	D	E	F	G	H
PMA & PME	1.464	752	1.353	762	872	594	*70°	406 mm Tire Dia.

* Total range with varying degree increments.

ORDER INFORMATION – Pump and Cart Modules with Assembled Jack Module

Capacity (tons)	Ret. Height (mm)	Ext. Height (mm)	Stroke (mm)	Pump Type	Power Required	Valve Type	Remote Control	Order No.
55	660,4	994	333	Electric	13/25 amps	Manual	M	**JEM5526**
100	838,2	1.172	333	Air	1,4 cu m /min at 6 bar	Manual	M	**JAM10033**
100	838,2	1.172	333	Air	1,4 cu m /min at 6 bar	Air Pilot	M & V	**JAR10033**
150	660,4	994	333	Electric	25 amps	Manual	M	**JEM15026**
150	838,2	1.172	333	Air	1,4 cu m/min at 6 bar	Manual	M	**JAM15033**

HYDRAULIC
& MECHANICAL
TOOLS

Power Team continues to expand its line of high-force industrial tools by offering a line of hydraulic torque wrenches. These tools, combined with Power Team's torque wrench pumps, are the standard in the market.

Power Team Cable Tools, originally known as the Brock Equipment Company, were first developed in 1945. In 2000, SPX acquired Brock. We are pleased to offer this time-tested line of tools under the Power Team brand name.

Today, as we prepare to celebrate our 80th anniversary in the industrial tool market, we continue to extend our offering of industrial tools and commitment to excellence in our desire to ensure complete satisfaction with our products. Like all Power Team products, these tools are covered by the Power Team Lifetime Marathon Warranty, protecting our customers from possible defects in materials and workmanship. (Contact factory for details.)

Torque Wrench
SQUARE DRIVE PREDATOR SERIES

MAX TORQUE 33496 Nm
700 bar

Heavy duty simple-to-use. Accuracy and speed under load. Breaking nuts loose and torquing.

HYDRAULIC TOOLS

PREDATOR SERIES SQUARE DRIVE TORQUE WRENCHES

- Low Weight, High Strength Design
- Superior Torsional Strength
- Fast Operation Cycle
- Fine Tooth Pawl
- Floating Piston Design
- Internal Swivel Manifold Relief
- Rigid Steel Body Construction
- Compact Frame Size

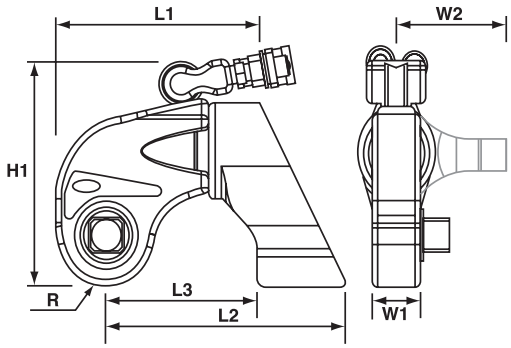

- Push Button Reversal of Square Drive
- Corrosion Resistant Finish
- 360˚ Reaction Arm
- Push to Click Reaction Arms
- Multi-Axis High Flow Swivel Manifold
- Simple Design
- Consistent Torque Output
- Fully Enclosed Drive Mechanism
- Accurate Torque Output
- Marathon Lifetime Warranty

Tool Model	L1 (mm)	L2 (mm)	L3 (mm)	H1 (mm)	R (mm)	W2 (mm)	W1 (mm)
TWSD1	139	170	112	146	29	87	34
TWSD3	169	196	124	176	39	105	45
TWSD6	195	237	142	206	46	136	51
TWSD11	234	292	179	242	55	165	61
TWSD25	306	375	231	314	72	200	77

Tool Model	Square Drive mm	Max. Torque Nm	Tool Weight kg
TWSD1	19.0	1800	2.3
TWSD3	25.4	4160	4.5
TWSD6	38.1	8157	7.9
TWSD11	38.1	14823	13.1
TWSD25	63.5	33496	29.5

Sockets & Allen Drives

SQUARE DRIVE PREDATOR SERIES

MAX TORQUE 33496 Nm

700 bar

Heay-duty square dirve sockets and allen drives. Available in a wide range of sizes.

Socket Size	3/4" Drive Part No.	1" Drive Part No.	1-1/2" Drive Part No.	2-1/2" Drive Part No.
22mm	TWSMA022	TWSMB022	-	-
24mm	TWSMA024	TWSMB024	-	-
32mm	TWSMA032	TWSMB032	TWSMC032	-
36mm	TWSMA036	TWSMB036	TWSMC036	-
41mm	TWSMA041	TWSMB041	TWSMC041	-
46mm	TWSMA046	TWSMB046	TWSMC046	-
50mm	TWSMA050	TWSMB050	TWSMC050	TWSMF050
55mm	TWSMA055	TWSMB055	TWSMC055	TWSMF055
60mm	TWSMA060	TWSMB060	TWSMC060	TWSMF060
65mm	-	TWSMB065	TWSMC065	TWSMF065
70mm	-	TWSMB070	TWSMC070	TWSMF070
75mm	-	TWSMB075	TWSMC075	TWSMF075
80mm	-	TWSMB080	TWSMC080	TWSMF080
85mm	-	TWSMB085	TWSMC085	TWSMF085
90mm	-	TWSMB090	TWSMC090	TWSMF090
95mm	-	TWSMB095	TWSMC095	TWSMF095
100mm	-	TWSMB100	TWSMC100	TWSMF0100
110mm	-	TWSMB110	TWSMC110	TWSMF0110
115mm	-	-	TWSMC115	TWSMF0115
120mm	-	-	TWSMC120	TWSMF120
130mm	-	-	-	TWSMF0130
135mm	-	-	-	TWSMF0135
145mm	-	-	-	TWSMF0145
150mm	-	-	-	TWSMF0150
155mm	-	-	-	TWSMF0155

Torque Wrench	Hexagon Drive Size A/F (mm)	Part No.
TWSD1	17mm	TWD1-017
	19mm	TWD1-019
	22mm	TWD1-022
	24mm	TWD1-024
	27mm	TWD1-027
TWSD3	17mm	TWD3-017
	19mm	TWD3-019
	22mm	TWD3-022
	24mm	TWD3-024
	27mm	TWD3-027
	30mm	TWD3-030
	32mm	TWD3-032
TWSD6	22mm	TWD6-022
	24mm	TWD6-024
	27mm	TWD6-027
	30mm	TWD6-030
	32mm	TWD6-032
	36mm	TWD6-036
	41mm	TWD6-041

Torque Wrench	Hexagon Drive Size A/F (mm)	Part No.
TWSD11	27mm	TWD11-027
	30mm	TWD11-030
	32mm	TWD11-032
	36mm	TWD11-036
	41mm	TWD11-041
	46mm	TWD11-046
TWSD25	36mm	TWD25-036
	41mm	TWD25-041
	46mm	TWD25-046
	50mm	TWD25-050
	55mm	TWD25-055
	60mm	TWD25-060
	65mm	TWD25-065
	70mm	TWD25-070

PUMP ACCESSORIES Page 116-119
TECH DATA Page 238
TORQUE GUIDELINES Page 241

Torque Wrench

LOW CLEARANCE PREDATOR SERIES

39,024 Nm MAX TORQUE

700 bar

The Lightweight, heavy-duty tool features a long neck, short height, and small radius for inaccessible bolting areas found in industry.

* Links sold separately.
Tool is not shipped with link.

PREDATOR LOW CLEARANCE TORQUE WRENCHES

The TWLC Predator Series Wrench was designed for the most inaccessible bolting areas found in industry. Its long neck, short height and small radius have all added to its great success

- Low Weight, High Strength Design
- Superior Torsional Strength
- Fast Operation Cycle
- Fine Tooth Pawl
- Floating Piston Design
- Auto-Connect Drive Piston
- Compact Frame Size
- Rigid Steel Body Construction
- Internal SwivelManifold Relief
- Built-in Reaction Pad
- Small Nose Radius
- Tool Free Link Change
- Corrosion Resistant Finish
- Multi-Axis High Flow Swivel Manifold
- Simple Design
- Consistent Torque Output
- Marathon Lifetime Warranty

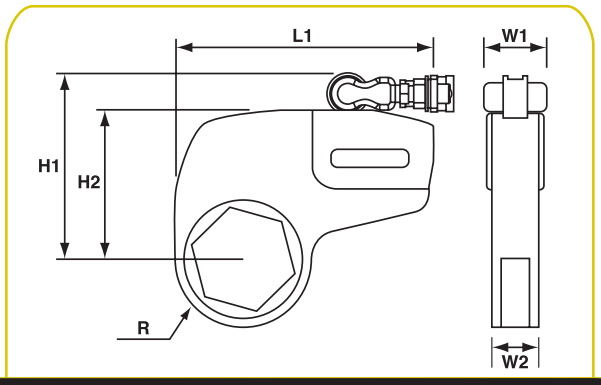

HOSES – DUAL LINE	
TWH15	4.6m, 9.5mm ID non-conductive
TWH20	6m, 9.5mm ID non-conductive
TWH50	15.2m, 9.5mm ID non-conductive

Tool Model	L1 (mm)	H1 (mm)	H2 (mm)	R (mm)	W1 (mm)	W2 (mm)
TWLC2	178	103	136	32–46	42	32
TWLC4	223	130	163	37–59	52	42
TWLC8	265	158	195	51–74	69	54
TWLC15	306	186	223	61–87	80	63
TWLC30	391	239	276	77–116	106	82

Tool Model	Hex Range mm	Max. Torque Nm	Tool Weight kg
TWLC2	32 – 60	2,134	2.8
TWLC4	40 – 80	5,386	5.7
TWLC8	60 – 100	10,773	10.4
TWLC15	65 – 120	20,221	16.9
TWLC30	80 – 155	39,024	35.0

PUMP ACCESSORIES Page 116-119
TECH DATA Page 238
TORQUE GUIDELINES Page 241

Links & Reducers

LOW CLEARANCE PREDATOR SERIES

39,024 Nm MAX TORQUE

700 bar

LINKS & REDUCERS

- Available in the most common sizes
- Custom sizes available (contact factory)

Tool Model	Link	Nut A/F (mm)	Reducer (mm)	Part No.	Reducer (mm)	Part No.	Reducer (mm)	Part No.
TWLC2	TWL2-032	32	-	-	-	-	-	-
	TWL2-036	36	-	-	-	-	-	-
	TWL2-041	41	41-36mm	TWR2-041036	41-32mm	TWR2-041032	-	-
	TWL2-046	46	46-41mm	TWR2-046041	46-36mm	TWR2-046036	46-32mm	TWR2-046032
	TWL2-050	50	50-46mm	TWR2-050046	50-41mm	TWR2-050041	50-36mm	TWR2-050036
	TWL2-055	55	55-50mm	TWR2-055050	55-46mm	TWR2-055046	55-41mm	TWR2-055041
	TWL2-060	60	60-55mm	TWR2-060055	60-50mm	TWR2-060050	60-46mm	TWR2-060046
TWLC4	TWL4-041	41	41-36mm	TWR4-041036	41-32mm	TWR4-041032	-	-
	TWL4-046	46	46-41mm	TWR4-046041	46-36mm	TWR4-046036	46-32mm	TWR4-046032
	TWL4-050	50	50-46mm	TWR4-050046	50-41mm	TWR4-050041	50-36mm	TWR4-050036
	TWL4-055	55	55-50mm	TWR4-055050	55-46mm	TWR4-055046	55-41mm	TWR4-055041
	TWL4-060	60	60-55mm	TWR4-060055	60-50mm	TWR4-060050	60-46mm	TWR4-060046
	TWL4-065	65	65-60mm	TWR4-065060	65-55mm	TWR4-065055	65-50mm	TWR4-065050
	TWL4-070	70	70-65mm	TWR4-070065	70-60mm	TWR4-070060	70-55mm	TWR4-070055
	TWL4-075	75	75-70mm	TWR4-075070	75-65mm	TWR4-075065	75-60mm	TWR4-075060
	TWL4-080	80	80-75mm	TWR4-080075	80-70mm	TWR4-080070	80-65mm	TWR4-080065
TWLC8	TWL8-060	60	60-55mm	TWR8-060055	60-50mm	TWR8-060050	60-46mm	TWR8-060046
	TWL8-065	65	65-60mm	TWR8-065060	65-55mm	TWR8-065055	65-50mm	TWR8-065050
	TWL8-070	70	70-65mm	TWR8-070065	70-60mm	TWR8-070060	70-55mm	TWR8-070055
	TWL8-075	75	75-70mm	TWR8-075070	75-65mm	TWR8-075065	75-60mm	TWR8-075060
	TWL8-080	80	80-75mm	TWR8-080075	80-70mm	TWR8-080070	80-65mm	TWR8-080065
	TWL8-085	85	85-80mm	TWR8-085080	85-65mm	TWR8-085065	85-70mm	TWR8-085070
	TWL8-090	90	90-85mm	TWR8-090085	90-80mm	TWR8-090080	90-75mm	TWR8-090075
	TWL8-095	95	95-90mm	TWR8-095090	95-85mm	TWR8-095085	95-80mm	TWR8-095080
	TWL8-100	100	100-95mm	TWR8-100095	100-90mm	TWR8-100090	100-85mm	TWR8-100085
TWLC15	TWL15-070	70	70-65mm	TWR15-070065	70-60mm	TWR15-070060	70-55mm	TWR15-070055
	TWL15-075	75	75-70mm	TWR15-075070	75-65mm	TWR15-075065	75-60mm	TWR15-075060
	TWL15-080	80	80-75mm	TWR15-080075	80-70mm	TWR15-080070	80-65mm	TWR15-080065
	TWL15-085	85	85-80mm	TWR15-085080	85-65mm	TWR15-085065	85-70mm	TWR15-085070
	TWL15-090	90	90-85mm	TWR15-090085	90-80mm	TWR15-090080	90-75mm	TWR15-090075
	TWL15-095	95	95-90mm	TWR15-095090	95-85mm	TWR15-095085	95-80mm	TWR15-095080
	TWL15-100	100	100-95mm	TWR15-100095	100-90mm	TWR15-100090	100-85mm	TWR15-100085
	TWL15-105	105	105-100mm	TWR15-105100	105-95mm	TWR15-105095	105-90mm	TWR15-105090
	TWL15-425	-	-	TWR15-425388	-	TWR15-425375	-	TWR15-425350
	TWL15-110	110	110-105mm	TWR15-110105	110-100mm	TWR15-110010	110-95mm	TWR15-110095
	TWL15-115	115	115-110mm	TWR15-115110	115-105mm	TWR15-115105	115-100mm	TWR15-115100
	TWL15-463	-	-	TWR15-463425	-	TWR15-463388	-	TWR15-463375
TWLC30	TWL30-080	80	80-75mm	TWR30-080075	80-70mm	TWR30-080070	80-65mm	TWR30-080065
	TWL30-085	85	85-80mm	TWR30-085080	85-65mm	TWR30-085065	85-70mm	TWR30-085070
	TWL30-090	90	90-85mm	TWR30-090085	90-80mm	TWR30-090080	90-75mm	TWR30-090075
	TWL30-095	95	95-90mm	TWR30-095090	95-85mm	TWR30-095085	95-80mm	TWR30-095080
	TWL30-100	100	100-95mm	TWR30-100095	100-90mm	TWR30-100090	100-85mm	TWR30-100085
	TWL30-105	105	105-100mm	TWR30-105100	105-95mm	TWR30-105095	105-90mm	TWR30-105090
	TWL30-425	-	-	TWR30-425388	-	TWR30-425375	-	TWR30-425350
	TWL30-110	110	110-105mm	TWR30-110105	110-100mm	TWR30-110010	110-95mm	TWR30-110095
	TWL30-115	115	115-110mm	TWR30-115110	115-105mm	TWR30-1150105	115-100mm	TWR30-115100
	TWL30-463	-	-	TWR30-463425	-	TWR30-463388	-	TWR30-463375
	TWL30-120	120	120-115mm	TWR30-120115	120-110mm	TWR30-120110	120-105mm	TWR30-120105
	TWL30-500	-	-	TWR30-500463	-	TWR30-500425	-	TWR30-500388
	TWL30-130	130	130-120mm	TWR30-130120	130-115mm	TWR30-130115	130-110mm	TWR30-130110
	TWL30-135	135	135-125mm	TWR30-135125	135-120mm	TWR30-135120	135-115mm	TWR30-135115
	TWL30-145	145						
	TWL30-150	150						
	TWL30-155	155						

AVAILABLE UPON REQUEST

Electric & Air Pumps
HYDRAULIC TORQUE WRENCH PUMPS

PREDATOR Series

700 bar

Constant horsepower pump or horsepower limiting pump. Engineered with precision machining and strong alloys.

HYDRAULIC TOOLS

PREDATOR SERIES HYDRAULIC ELECTRIC & AIR PUMPS

The new Predator Series electric and air pumps are the first constant horsepower pump or horsepower limiting pump in the portable hydraulic pump market.
The Predator Series line of pumps, is initially available in a torque wrench configuration. What can torque wrench users expect? In a word..... SPEED.
A few advantages of the Predator Series Pumps:

- Greater Speed
- Continuous Duty Operation
- External Pressure Adjustment
- Four Tool Manifold
- Calibratible Gauge
- Roll Bar Design
- Sealed Hydraulic Reservoir
- Modular Pumping Cartridges
- 1,500 psi/103 Bar Return Side Relief Protection
- Marathon Lifetime Warranty

CAUTION: This Pump should not be used for lifting applications

Patent Pending

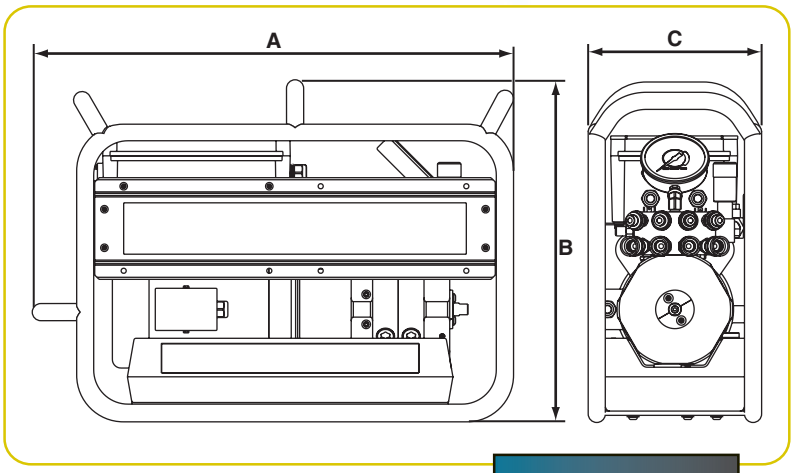

Tool Model.	Voltage Freq.	Max. Pressure Output	RPM	dBa at Idle & 700 bar	Amp Draw @ 700 bar	OIL DELIVERY 48 bar	172 bar	350 bar	700 bar	Reservoir Usable	A Height	B Width	C Length	Product Weight (w/oil)
PCHE60A1BA-4	110-120 V / 60 Hz	700 bar	3,450	75	15	9.9 L/min.	3.8 L/min.	1.8 L/min.	1 L/min.	3.8L	505mm	257mm	711mm	45kg
PCHE60A1BB-4	110-120 V / 50 Hz	700 bar	2,850	75	15	9.9 L/min.	3.8 L/min.	1.8 L/min.	1 L/min.	3.8L	505mm	257mm	711mm	45kg
PCHE60A1BC-4	220-240 V / 60 Hz	700 bar	3,450	75	7.5	9.9 L/min.	3.8 L/min.	1.8 L/min.	1 L/min.	3.8L	505mm	257mm	711mm	45kg
PCHE60A1BD-4	220-240 V / 50 Hz	700 bar	2,850	75	7.5	9.9 L/min.	3.8 L/min.	1.8 L/min.	1 L/min.	3.8L	505mm	257mm	711mm	45kg

Tool Model.	Required Air Pressure	Max. Pressure Output	RPM	dBa at Idle & 700 bar	48 bar	172 bar	350 bar	700 bar	Reservoir Usable	A Height	B Width	C Length	Product Weight (w/oil)
PCHA120A1BA-4	1,4 m³/min @ 6 bar	700 bar	3,000	75	19.8 L/min.	7.6 L/min.	3.6 L/min.	2 L/min.	3.8L	505mm	257mm	711mm	36.3kg

POWER TEAM

Electric Pump
HYDRAULIC TORQUE WRENCH PUMP

PE30 Series
5 l/min Max Flow
700 bar

VANGUARD® ELECTRIC HYDRAULIC TORQUE WRENCH PUMPS

- Two-speed general duty pump
- External adjustable pressure regulator
- Retract side internal relief valve protects tool
- Hand remote
- Use for double or single acting tools

CE

⚠ **CAUTION:** This system should not be used for lifting applications.

HYDRAULIC TOOLS

Pump Model	Oil Delivery	Oil Reservoir (l)	Usable Oil (l)	Overall Width (mm)	Overall Length (mm)	Overall Height (mm)	Pump Weight w/Oil (kg)
PE30TWP-E110*	5 l/min. at 7 bar	4,75	4,5	356	331	458	30,9
PE30TWP-E220*	0,5 l/min. at 700 bar	4,75	4,5	356	331	458	33

Electrical Data	
Electric Motor	**Electrical Control**
4,000 rpm 0,75 KW, 115V/50Hz, 13 A 0,75 KW220V/50Hz, 7 A	24 Volt remote control with 3 m cord

*CE Approved - designed for 50 Hz applications

PUMP ACCESSORIES Page 116-119
TECH DATA Page 238
TORQUE GUIDELINES Page 241

Electric Pump
HYDRAULIC TORQUE WRENCH PUMP

PE55 Series
11,5 l/min MAX FLOW

700 bar

HYDRAULIC TOOLS

VANGUARD® ELECTRIC HYDRAULIC TORQUE WRENCH PUMPS

- Two-speed high performance pump
- External adjustable pressure regulator
- Retract side internal relief valve protects tool
- Hand remote
- Use for double or single acting tools
- Four-tool manifold (-4 model only) allows use of up to four tools simultaneously

⚠ **CAUTION:** This system should not be used for lifting applications.

Pump Model	Oil Delivery (l/min)	Oil Reservoir (l)	Usable Oil (l)	Overall Width (mm)	Overall Length (mm)	Overall Height (mm)	Pump Weight w/Oil (kg)
PE55TWP **PE55TWP-E110*** **PE55TWP-E220***	11,5 at 7 bar 0,9 at 700 bar	9,5	8,4	435	241	460	34
PE55TWP4 **PE55TWP4-E110*** **PE55TWP4-E220***	11,5 at 7 bar 0,9 at 700 bar	9,5	8,4	470	241	486	35,4

Electrical Data	
Electric Motor	**Electrical Control**
0,84 KW, 12000 rpm 115V, 25 amps 110V/50Hz, 25 amps 220V/50Hz, 13 amps	Remote control with 3m cord

* CE Approved-designed for 50Hz. applications.

POWER TEAM®

Air Pump
HYDRAULIC TORQUE WRENCH

RWP55 SERIES
Max. flow 7,6 l/min
700 bar

AIR HYDRAULIC TORQUE WRENCH PUMP

- Use where air is the preferred source of power
- Powerful 2,2 Kw motor starts under load
- External adjustable pressure regulator
- Retract side internal relief valve protects tool
- Use for double or single acting tools

CAUTION: This system should not be used for lifting applications.

HYDRAULIC TOOLS

Pump Model	Oil Delivery (l/min)	Oil Reservoir (l)	Usable Oil (l)	Overall Width (mm)	Overall Length (mm)	Overall Height (mm)	Pump Weight w/Oil (kg)
RWP55	7,6 l/min at 7 bar 0,9 l/min at 700 bar	9,5	8,4	450	280	483	44
RWP55-4 (4-tool manifold)	7,6 l/min at 7 bar 0,9 l/min at 700 bar	9,5	8,4	450	280	483	44

Motor Data	
Air Motor	**Air Control**
2,25 KW 1,4 m^3 / min @ 6 bar	Pneumatic remote control with 3,6 m cord

PUMP ACCESSORIES Page 116-119
TECH DATA Page 238
TORQUE GUIDELINES Page 241

Nut Splitters
HYDRAULIC

15 & 25 Ton Capacity

HYDRAULIC TOOLS

HYDRAULIC NUT SPLITTERS – 15- & 25-TON CAPACITY

- "Dial-in" feature on HNS150 makes adjustment of splitter simple, without the worry of damaging the bolt
- Specially designed "tool steel" cutter blade penetrates the nut to the precise point where it cracks, stopping short of the bolt threads
- Nut splitter features a dramatically improved cutter blade with an 800% greater resistance to chipping and breaking over previous models
- All models feature a rugged one-piece cutting frame coupled to a heavy-duty hydraulic cylinder
- Compact size allows you to use it in confined areas where it will deliver enough force to split the toughest "fused" or rusted-on grade 2H nuts
- Simply split nut on one side, spin nut splitter 1/2 turn and make second cut on opposite side; nut separates into halves for easy removal

HNS150

HNS225

For HNS150A

FOR HNS150A

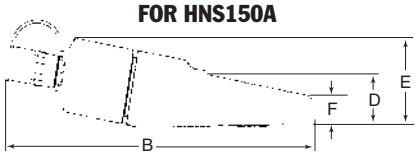

FOR HNS150 & HNS225

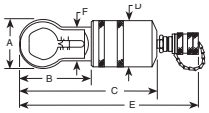

Align mark on cutter blade with scale.

Tool Model	FOR HNS150 & HNS225 A	B	C	D	E	F	HEAD THICKNESS (mm)	REPLACEMENT BLADE	TOOL WEIGHT (kg)
HNS150	73	86	200	70	264	53	25,4	308840	3,7
HNS150A	77	361	27	54	94	30	25,4	351985	7,2
HNS225	108	153	366	99	C	82	38,1	308022	13,2

CAPACITIES

Tool Model	Nut Grade 5 (2 or A)	9 (5 or B)	10 (8 or C)	12 (2 or H)
HNS150	1/2 - 1-1/2" (12,7-38,1mm) hex	1/2 - 1-1/2" (12,7-38,1mm) hex	1/2 - 1-5/16" (12,7-33mm) hex	1/2 - 1-1/8" (12,7-29mm) hex
HNS150A	1/2 - 1-1/2" (12,7-36mm) hex	1/2 - 1-1/2" (12,7-36mm) hex	1/2 - 1-5/16" (12,7-33mm) hex	1/2 - 1-1/8" (12,7-29mm) hex
HNS225	1-1/8 - 2-1/4" (29-57mm) hex	1-1/8 - 2-1/4" (54-57mm) hex	1-1/8 - 2-1/6" (29-55 mm) hex	1-1/8 - 1-11/16" (29-43mm) hex

POWER TEAM

Pipe Flange
HYDRAULIC SPREADERS

5 & 10 Ton

HFS3A

- You'll never again have to resort to "hammer and chisel" methods that waste time and effort. Flange spreaders should be used in pairs to provide even spreading force.
- Standard 60° wedge is suitable for most flanges; 30° "thin" and 60° "blunt" wedges are optional.
- The HFS3A is designed for applications where total thickness of flanges and max. spread gap is 76,2 mm or less and flange bolts are a min. of 17,5 mm dia.
- Use HFS6A if total thickness of flanges and max. spread gap is 152,4 mm or less, and flange bolts are a min. of 20,7 mm dia.

350823 350822 350549 350550

Capacity (tons)	Order Number	Standard Wedge Type	Optional Wedges 30° Thin	Optional Wedges 60° Blunt	Min. Flange Opening (mm) 60° Std.	Min. Flange Opening (mm) 60° Blunt	Min. Flange Opening (mm) 30°	Max. Flange Opening (mm) 60° Std.	Max. Flange Opening (mm) 60° Blunt	Max. Flange Opening (mm) 30°	Combined Flange Opening (mm)	Max. Pin Dia. (mm)	Weight (kg)
5	**HFS3A**	60˚ Sharp	350823	350822	1,6	25,4	1,6	38,1	38,1	18,3	76,2	17,4	4,1
10	**HFS6A**	60˚ Sharp	350549	350550	1,6	38,1	1,6	50,8	50,8	24,6	152,4	20,6	8,2

TECH DATA
Page 238

Spreaders
HYDRAULIC

1-1½ Ton

HS2000
(Forged Steel)

It's a hydraulic pry bar!

HYDRAULIC TOOLS

HS3000
(High Grade
Ductile Iron)

Tested to conform to ASME B30.1 standard

- Use to lift machines or as a clamp; spread concrete forms or rebar or perform straightening jobs.
- Conforms to ASME B30.1 standard.
- High strength alloy steel forged upper and lower jaws on HS2000.
- Jaws are spring-return; retract automatically when pressure is released.

No. HS2000 – 1-ton capacity spreader. Full 908 kg capacity at 700 bar with 102mm spread. Can be "dead-ended" at 102mm spread under full load. Needs only 14,2mm clearance to engage jaws.

No. HS3000 – 1½-ton capacity spreader. Full 1.362 kg capacity at 700 bar with 292 mm spread. Greater than competitive units. Needs only 30,2 mm clearance to engage jaws. Can be "dead-ended" at 292 mm spread at full load.

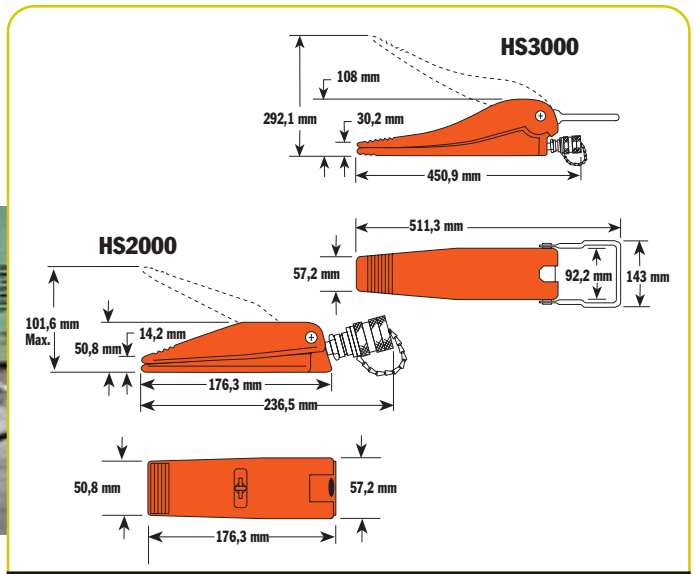

Capacity (tons)	Max. Spread (mm)	Order Number	A (mm)	B (mm)	C (mm)	D (mm)	E (mm)	F (mm)	G (mm)	H (mm)	I (mm)	Oil Capacity (cm³)	Min. Clearance Required (mm)	Weight (kg)
1	101,6	**HS2000**	101,6	50,4	14,3	252,52	236,5	50,8	176	57	—	4	14,2	2,2
1½	292	**HS3000**	292	108	30,2	—	451	57,2	511	143	92	20	30.2	10

HS2000 SPECIFICATIONS

Maximum rated capacity .....1 ton at 700 bar
Maximum spread .....101,6 mm
Minimum clearance required .....14,2 mm
Cm³ oil required 4

HS3000 SPECIFICATIONS

Maximum rated capacity ..... 1½-ton at 700 bar
Maximum spread ..... 292 mm
Minimum clearance required.....30,2 mm
Cm³ oil required 20

POWER TEAM

C-Clamps
HYDRAULIC
Accessories

"C" CLAMPS

5, 10 & 25 TONS

CC10

- In 5, 10 and 25 ton capacities. For use with Power Team general purpose single-acting series cylinders of comparable capacity.
- For clamping, pressing and bending. Ideal for welding and metal fabrication for fit-up of sheet or plate steel.
- Clamps withstand full rated capacity of the cylinders for which they are intended.
- To minimize the effects of off-center loading, the CC5, CC10 and CC25 should be used with the optional 350144 and 350145 swivel caps.

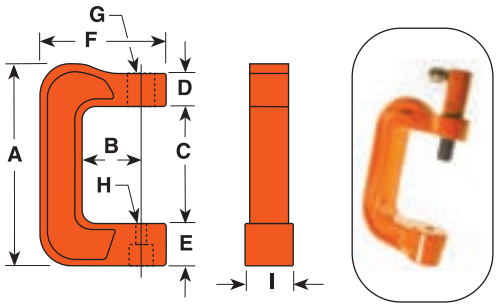

Items pictured at left are:
CC10
C104C
201923

Cap. (tons)	Order Number (C-Clamp only)	Use With Cyl. No.	A (mm)	B (mm)	C (mm)	D (mm)	E (mm)	F (mm)	G (in.)	H (mm)	I (mm)	Weight (kg)
5	**CC5**	C51C-C57C	314	95,3	186	50,8	63,5	197	1 1/2"-16 UN	22,2	76,2	11,3
10	**CC10**	C101C-C1010C	403	152,4	240	50,8	85,8	273	2 1/4"-14 UNS	22,2	88,9	20,9
25	**CC25**	C251C-C2514C	533	152,4	319	76,2	114,3	313	3 5/16"-12 UNS	36,5	117,5	41,3

OPTIONAL ACCESSORIES FOR USE WITH CC5, CC10 & CC25 HYDRAULIC CLAMPS

Swivel Caps

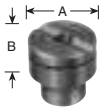

10 ton
350144*
A–35 mm
B–19 mm

25 ton
350145
A–50,8 mm
B–25,4 mm

Threaded Adapters

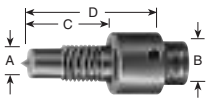

10 ton
38597
A–1 - 8
B–1 - 8
C–19 mm
D–50,8 mm

25 ton
38953
A–1 1/4-7
B–1 1/2-16
C–70 mm
D–111 mm

Pushing Adapters

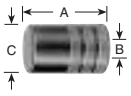

10 ton
28228**
A–60,3 mm
B–1 - 8
C–38,1 mm

25 ton
28229**
A–73 mm
B–1 1/4-7
C–44,5 mm

Pushing Adapters

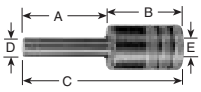

10 ton
201923**
A–79,4 mm
B–57,2 mm
C–136,5 mm
D–12,7 mm
E–1 - 8

25 ton
34510**
A–82,6 mm
B–66,7 mm
C–149 mm
D–19 mm
E–1 1/4-7

Pushing Adapters

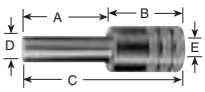

10 ton
201454**
A–79,4 mm
B–57,2 mm
C–137 mm
D–19 mm
E–1 - 8

25 ton
34511**
A–82,6 mm
B–66,7 mm
C–149 mm
D–25,4 mm
E–1 1/4-7

V Pushing Adapters

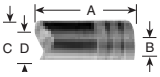

10 ton
34806**
A–66,7 mm
B–1 - 8
C–38,1 mm
D–25,4 mm

25 ton
34807**
A–79,4 mm
B–1 1/4-7
C–44,5 mm
D–31,8 mm

Pushing Adapters

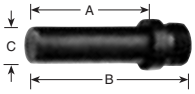

5 ton
309874*
A–51.6 mm
B–562,8 mm
C–15,9 mm

* May be used with CC5
** Must be used with a threaded adapter.

HYDRAULIC TOOLS

Tire Removing

BB SERIES TOOL

10 Ton Hydraulic

Unseat tire beads hydraulically on 25" to 49" diameter earth mover rims with pry bar pockets.

HYDRAULIC TOOLS

TIRE REMOVING TOOL

- Made to fit into the pry bar pocket
- Hydraulic pressure does all the unseating.
- Lightweight and portable.
- P55 hydraulic hand pump and 9764 hose recommended to be used with BB1600.

Tool Model	Tool Weight kg.	Rim Size	Cylinder Capacity	Stroke (mm)
BB-1600	10,25	25"–49"	10	101,6
BB1601	10,9	25"–49" Single, two, three piece rims	10	101,6
Contact Factory	13,65	25"–51"	12,3	107,9

Crimping Tool
HHT SERIES

13-14 Ton
700 bar

The industry standard; durable, long-lasting hand hydraulic tools.

HYDRAULIC TOOLS

COMPRESSION TOOLS FOR U- OR SHELL-TYPE DIES

- Two-speed pump for rapid ram advance*
- High-strength fiberglass handles
- C-shaped head with 360° rotation for ease of accessibility**
- Capacity for all U- or shell-type dies
- Twist handle release
- High-pressure safety relief valve
- Push-button system for ease of die insertion and removal
- With Carrying Bag

C12-TON-B

- C-shaped head with 180° rotation for ease of accessibility
- Trigger release handle

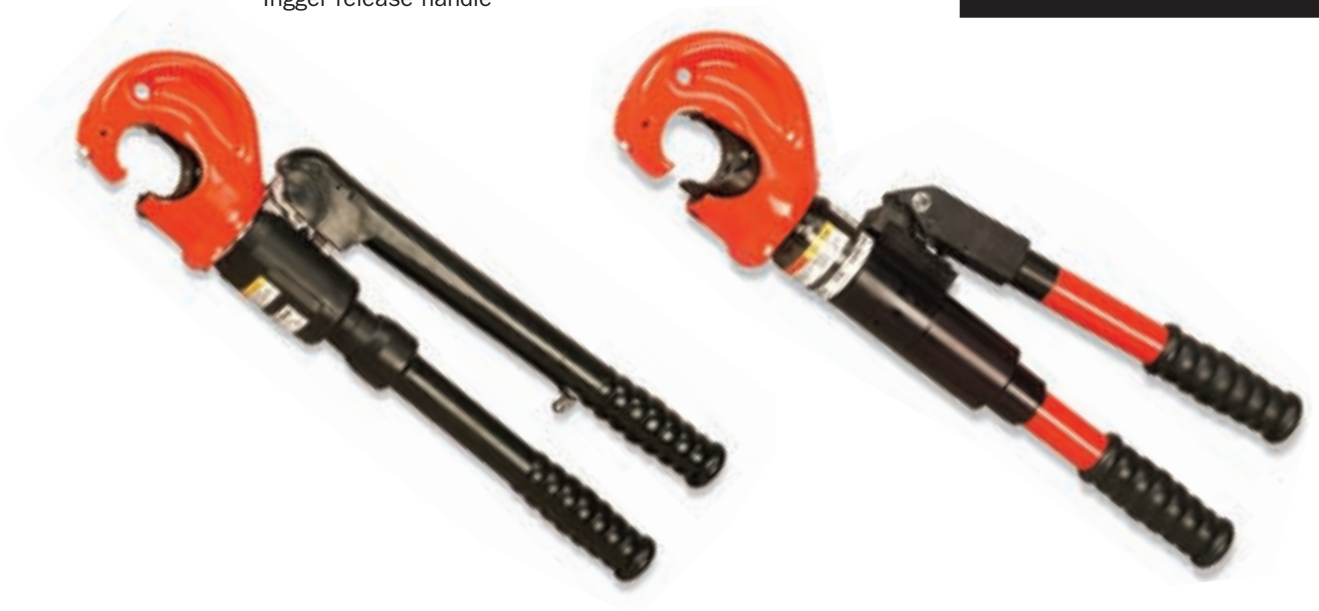

Tool Model	Crimping Force (tons)	Operating Pressure (bar)	Jaw Opening (mm)	Crimping Capacity (mm²)	Overall Length (mm)	Overall Depth (mm)	Head Width (mm)	Tool Weight (kg)
C12-TON-B	11,9	700	24,1	see below	579	76,2	217,5	6,1
C12-HHT-B	11,9	700	24,1	see below	579	76,2	219,5	6,1
C14-HHT-B	12,7	700	38,1	350	591	78,7	213	7,8

C12-HHT Crimping Capacity

Copper	Aluminum	ASCR (Al+Cu+St)
No. 8 stranded through 260 mm² grounding terminals and splices	No. 8 stranded through 380mm² terminals	
No. 8 stranded through 125 mm² grounding taps and 3/4" ground rod		No. 6 stranded through 280mm² 26/7 stranding
No. 8 stranded through 380 mm² insulated and uninsulated terminals	No. 8 stranded through 175 mm² splices	

* C12-Ton-B is a single stage pump.
** C12-Ton-B Head rotates 180°

Crimping Tool
REMOTE RSCT SERIES

6 Ton

700 bar

Remote, single-acting, lightweight for service entrance compression fittings.

HYDRAULIC TOOLS

REMOTE SERVICE CRIMPING TOOLS

FOR W- OR O-TYPE DIES

- Compact, lightweight design for reaching tight places
- 6 tons of force
- Pressure matched quick-coupler supplied
- Slim line C-head hydraulic tool accepts the popular W- and O-type dies for faster and easier installation as compared to mechanical tools.
- With Carrying Case

Tool Model	Crimping Force (ton)	Operating Pressure (bar)	Crimping Capacity Copper/Aluminum	Overall Length (mm)	Overall Depth (mm)	Head Width (mm)	Tool Weight (kg)
C6-RSCT-C	6.2	700	lugs, splices & H-taps through 110	291	63	99	2,9

Crimping Tool
REMOTE HTR SERIES

13-14 Ton

700 bar

Remote single-acting hydraulic tool is precision engineered for compression connectors on electrical conductors.

HYDRAULIC TOOLS

REMOTE COMPRESSION TOOLS FOR U- OR SHELL-TYPE DIES

- Compact, lightweight design for reaching tight places
- Capacity for all U- or shell-type dies
- Push-button system for ease of die insertion and removal
- Pressure matched quick-coupler supplied
- 420 bar model available; consult Power Team for details
- With Carrying Case

Tool Model	Crimping Force (ton)	Operating Pressure (bar)	Crimping Capacity (mm^2)	Overall Length (mm)	Overall Depth (mm)	Head Width (mm)	Tool Weight (kg)
C12-HTR-C	11,9	700	see below	296	76,2	130	4,6
C14-HTR-C	13,2	700	380	318,5	78,7	127,5	5,9

C12-HTR Crimping Capacity

Copper	Aluminum	ASCR
No. 8 stranded through 280 mm^2 grounding terminals and splices	No. 8 stranded through 380mm^2 terminals	
No. 8 stranded through 125 mm^2 grounding taps and 3/4" ground rod		No. 6 stranded through 280mm^2 up to 26/7 stranding
No. 8 stranded through 380 mm^2 insulated and uninsulated terminals	No. 8 stranded through 175 mm^2 splices	

Crimping Tool

60-100 Ton

700 bar

HYDRAULIC TOOLS

COMPRESSION TOOLS — SINGLE OR DOUBLE ACTING

- Large capacity for transmission and distribution applications
- Easy die set installation
- Capacity for U- or shell-type dies (H-types require conversion kit for 100 Series)
- Double acting conversion kit included
- Hinged flip-top head
- Carrying handles for portability
- Pressure matched quick-couplers supplied
- Carrying case is included with 60 and 100 ton

The 60-Ton Series Single or Double Acting Portable Hydraulic Compression Tool is precision designed and unsurpassed in the industry. This tool will provide years of dependable service. The compression tool develops 60 tons of force at 700 bar for the installation of electrical compression fittings. A special piston design facilitates operation in single or double acting mode by removing the vent plug from the upper port and substituting the quick-coupler, utilizing a 4-way control valve equipped pump at a high-pressure safety relief valve setting of 700 bar.

The 100-Ton Series Single or Double Acting Portable Hydraulic Compression Tool is designed for the installation of compression fittings. This precision - engineered compression tool develops 100 tons of force at 700 bar.

100-TON

60-TON

Tool Model	Compression Force (ton)	Operating Pressure (bar)	Crimping Capacity Copper/Aluminum (mm^2)	Overall Length (mm)	Head Width (mm)	Height (mm)	Tool Weight (kg)
60-TON S/DC	57	700	750	287,3	152,4	433	32
NEW 60-TON LS-C	57	700	750	287,3	152,4	433	27
100-TON S/DC	90	700	up to 82,5 mm outside diameter of connectors	387,3	324	504	96

Cutting Tools
HHC SERIES

6-13 Ton
700 bar

Two-speed, long lasting construction. Top stationary blade and bottom advance blade easy field maintenance.

HYDRAULIC TOOLS

CUTTING TOOLS FOR CABLE, WIRE AND BAR

- Two-speed pumping system for rapid blade advance
- Full 360° head rotation
- Compact, lightweight design for reaching tight places
- Twist release handle
- High-pressure safety relief valve
- Hinged flip-top head
- Easy blade replacement
- With tool bag

Tool Model	Cutting Force (ton)	Operating Pressure (bar)	Blade Opening (mm)	Overall Length (mm)	Overall Depth (mm)	Overall Width (mm)	Tool Weight (kg)
6-HHC-B	5,5	700	20,6	512	68	159	4
13-HHC-B	5,5	700	20,6	512	68	159	4

CUTTING CAPACITY — DIAMETERS (MM)

Tool Model	Soft Copper Bar	Soft Aluminum Bar	Soft Steel Bolts	Reinforcing Bar	Bare Stranded Copper/Aluminum Wire	ASCR	Stranded Galvanized Steel Wire	Underground Power Cable	Wire Rope
6-HHC-B	16	13	16	9,5	19	19	16	19	19
13-HHC-B	32	32	22	19	50	50	19	50	25

Cutting Tools
REMOTE HCR SERIES

6-13 Ton

700 bar

Applications up to 19 mm diameter. 13–HCR series designed for expanded cutting capabilities up to 50 mm diameter.

HYDRAULIC TOOLS

REMOTE CUTTING TOOLS FOR CABLE, WIRE AND BAR

- Compact, lightweight design for reaching tight places
- Hinged flip-top head
- Easy blade replacement
- Pressure matched quick-coupler supplied
- With Carrying Case

The 6-HCR Series Hydraulic Remote Cutting Tool is lightweight and compact, making it the perfect cutter for applications up to 19 mm diameter. The 13-HCR Series Remote Hydraulic Cutting Tool is designed for expanded cutting capabilities up to 50 mm in diameter. The insert type cutter blades, top stationary blade and bottom advance blade can easily be replaced in the field with only a 6 mm blade screwdriver.

Tool Model	Cutting Force (ton)	Operating Pressure (bar)	Blade Opening (mm)	Overall Length (mm)	Overall Depth (mm)	Overall Width (mm)	Tool Weight (kg)
6-HCR-C	5,5	700	20,6	216	68	57	2,1
13-HCR-C	12,5	700	53	379	105	175	7,2

CUTTING CAPACITY — DIAMETERS (MM)

Tool Model	Soft Copper Bar	Soft Aluminum Bar	Soft Steel Bolts	Reinforcing Bar	Bare Stranded Copper/Aluminum Wire	ASCR	Cable Stranded Galvanized Steel Wire	Underground Power Cable	Wire Rope
6-HCR-C	16	13	16	10	19	19	16	19	19
13-HCR-C	32	32	22	19	50	50	19	50	25

Booster Pump
HYDRAULIC 25 SERIES

0,8 l/min

700 bar

HYDRAULIC INTENSIFIERS/BOOSTERS

- Designed to intensify low-pressure systems to 280-700 bar
- Two-speed pump for rapid ram advance
- Designed to operate with external hydraulic oil systems
- All position mounting operation
- Design permits operation on open- or closed-center system
- Dual output pressure port selector valve (DUP models)
- High-pressure safety relief valve
- Carrying handle for portability
- Pressure matched quick-couplers supplied

The 25 Series Boosters represent an innovative concept, providing pressures up to 700 bar for the operation of high-pressure tools. Oil from an external source, such as a bucket truck or tractor, is intensified to 700 bar maximum. Low pressure from the source is bypassed through the booster for rapid ram advance. These compact, lightweight boosters do not have reservoirs. The units can be operated in any position on either open- or closed-center (accumulator) hydraulic systems.

HYDRAULIC TOOLS

Tool Model	Output Pressure (bar)	Input Pressure (bar)	Input Flow Rate (min-max) - (l /min)	Overall Width (mm)	Overall Length (mm)	Overall Height (mm)	Booster Weight (kg)
25-OM-DUP[10/10]-C 25-OA-DUP[10/10]-C	700	70-140	10-21	292	205	216	16
25-OM-[10]-C 25-OA-[10]-C	700	70-140	10-21	298	205	216	15

Flow rates based on 10 l/min at 70 bar with oil of 180 SUS at 37,8°C

Tool Model	Oil Delivery Low Pressure	Oil Delivery High Pressure
25-OM-DUP[10/10]-C 25-OA-DUP[10/10]-C 25-OM-[10]-C 25-OA-[10]-C	10 – 21 l/min	0,8 l/min

Crimping Pump
ELECTRIC HYDRAULIC PE-NUT

0,5 l/min
Two-Speed

Extremely durable yet lightweight. Operates under low-line voltage conditions.

HYDRAULIC TOOLS

PE-NUT PUMP — 115/230V

- 0,48 KW universal electric motor (50/60 cycle)
- Two-stage pump for rapid ram advance
- Operational under low-line voltage conditions
- Optional operating pressures available; consult Power Team for details
- Designed for use with spring-returned remote tools
- High-pressure safety relief valve
- Remote hand control with 3 m cord
- Carrying handle
- Factory filled oil reservoir
- Pressure matched quick-coupler supplied
- Optional carrying case

The PE-NUT Series High-Pressure Hydraulic Power Pumps are extremely durable yet lightweight and operate under low-line voltage conditions. The two-stage pumping system of these unique, intermittent duty pumps is designed for years of dependable service. These pumps incorporate a piston-type high-pressure pump supercharged by a low-pressure pump.

⚠ CAUTION: DESIGNED FOR CRIMPING APPLICATIONS ONLY! This system should not be used for lifting.

Pump Model	Oil Delivery l /min.	Oil Reservoir (l)	Usable Oil (l)	Overall Width (mm)	Overall Length (mm)	Overall Depth (mm)	Pump Weight w/Oil (kg)
PE-NUT PE-NUT-C*	(2,7 at 70 bar 0,5 at 700 bar)	6	2,8	165	365	210	12,6

Electrical Data	
Electric Motor	**Electrical Control**
0,48KW, 10,000 rpm 115V or 230V AC, 50/60 Hz 11 amp current draw (115V @ 700 bar)	Remote control with 3m cord

*Includes Case

POWER TEAM®

Crimping Pump
ELECTRIC HYDRAULIC PE18 SERIES

0,3 l/min Two-Speed

700 bar

Lightweight, compact. For maintenance and construction applications with concerns regarding low voltage.

HYDRAULIC TOOLS

VANGUARD JR.® PUMP - 115V OR 230V

- 0,37 KW universal electric motor (50/60 cycle)
- Two-stage pump for rapid ram advance
- For use with spring-returned remote tools or double acting tools
- Gauge port provided on pump

PE183C

- Has special electrical circuitry to pulse/advance, hold at full pressure, build to a predetermined pressure, release, and reset circuit
- Features separate emergency return switch

PE184C

- Allows you to alternately operate a spring-return cutting and/or crimping tool without disconnecting either tool
- Select port connection with manual 4-way valve, start pump with remote control hand switch, and extend connected tool
- When hand switch is switched to off, pump stops and automatic valve opens, allowing tool to return
- In center (neutral) position, manual control valve holds tool in position at time valve is shifted

⚠ CAUTION: DESIGNED FOR CRIMPING APPLICATIONS ONLY! This system should not be used for lifting.

Pump Model	Oil Delivery (l/ min)	Oil Reservoir (l)	Usable Oil (l)	Overall Width (mm)	Overall Length (mm)	Overall Depth (mm)	Pump Weight w/Oil (kg)
PE183C PE184C	1,9 at 70 bar 0,25 at 700 bar	1,9	1,7	152	406	203	13,5

Electrical Data	
Electric Motor	**Electrical Control**
0,37 KW, 12,000 rpm 115V or 230V AC, 10.2/ 5 A current draw	Remote control with 3m cord

Crimping Pump
GAS HYDRAULIC PG120 SERIES

2,1 l/min
700 bar

Features gasoline engines and large capacity reservoirs and roll cages. Designed for sites without electricity or compressed air.

HYDRAULIC TOOLS

GASOLINE POWER PUMPS

PG1203-CP

- 4,5 Kw Briggs & Stratton engine
- Manual control valve
- Two-stage pump for rapid advance
- High-pressure safety relief valve
- Protective roll cage
- For use with single acting tools

PG1203/4S-CP

- 4,1 Kw Honda OHV-type engine
- Remote hand control with 3 m cord
- Two-stage pump for rapid advance
- High-pressure safety relief valve
- Protective roll cage
- For use with either single or double acting tools

⚠ CAUTION: DESIGNED FOR CRIMPING APPLICATIONS ONLY! This system should not be used for lifting.

Pump Model	Oil Delivery (l/min)	Oil Reservoir (l)	Usable Oil (l)	Overall Width (mm)	Overall Length (mm)	Overall Height (mm)	Pump Weight w/Oil (kg)
PG1203-CP PG1203/4S-CP	7,8 at 70 bar 2,1 at 700 bar	11	8	501	552	622	70

Hose
NON-CONDUCTIVE

6,4 mm I. D.

700 bar

HYDRAULIC TOOLS

NON-CONDUCTIVE HOSES

- For applications requiring electrical isolation.
- 3/8" NPTF fittings on both ends
- All couplers feature metal dust caps
- Leakage factor of less than 50 microampere.
- Orange polyurethane for easy identification.
- Covering is not perforated, preventing moisture from entering the hose and affecting its overall conductivity.
- Hoses feature a minimum 2 800 bar burst pressure.

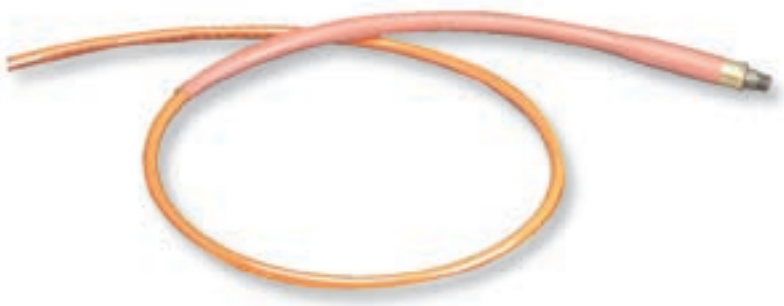

Hose No.	Couplers/ Fitting	I. D. (mm)	Length (m)
3-3932	3/8" fitting	6,4	1,8
3-3933	3/8" fitting	6,4	3
3-3934	3/8" fitting	6,4	4,5
3-3935	3/8" fitting	6,4	7,5
3-3944*	Male/Male Couplers	6,4	1,8
3-3945*	Male/Male Couplers	6,4	3
3-3946*	Male/Male Couplers	6,4	4,5
3-3947*	Male/Male Couplers	6,4	7,5
3-3956*	Male/Female Couplers	6,4	1,8
3-3957*	Male/Female Couplers	6,4	3,0
3-3958*	Male/Female Couplers	6,4	4,5
3-3959*	Male/Female Couplers	6,4	7,5

* Hoses are prefilled with hydraulic fluid

Hydraulic
PUNCHES
20 & 35 Ton

HYDRAULIC TOOLS

- Punch smooth, precise holes in seconds; much faster than drilling.
- Fully portable for construction, maintenance and service applications, or can be mounted on a workbench for production jobs. Has carrying handle for precise locating.
- Rugged, forged steel “C” frame for great strength and durability.
- Dual action, spring loaded stripper holds material during punching operation, strips material from punch on return. Scribe lines on stripper aid in locating the punch (HP 35 only).
- Double Acting prevents binding and speeds retraction (HP20 only).
- The PE172 electric/hydraulic pump is an ideal power source.

HP35

No. HP35 – Punch only, includes metal case and die change tools. Wt., 19 kg.

No. HP35S – Punch with punches and dies. Includes HP35 punch, metal case and 250459 punch/die set. Wt.,20 kg.

No. HP35P – Punch set with pump. Same as HP35SP, but does not include punch/die set. Wt., 39 kg. NOTE: Available in 220 volt, 50 Hz. Order with suffix "-220".

No. HP35SP – Punch set with pump. Includes HP35 punch, PE172 electric/hydraulic pump, 9756 hose, 9798 hose half coupler, 250459 punch/die set, metal case. Wt., 40 kg. NOTE: 220 volt, 50 Hz. Order with suffix "-220".

No. 250459 – Punch/die set for round holes. Includes one each: PD437 11,1 mm punch/die, PD562 14,3 mm punch/die, PD688 17,5 mm punch/die, PD812 20,6 mm punch/die. Wt., 0,7 kg.

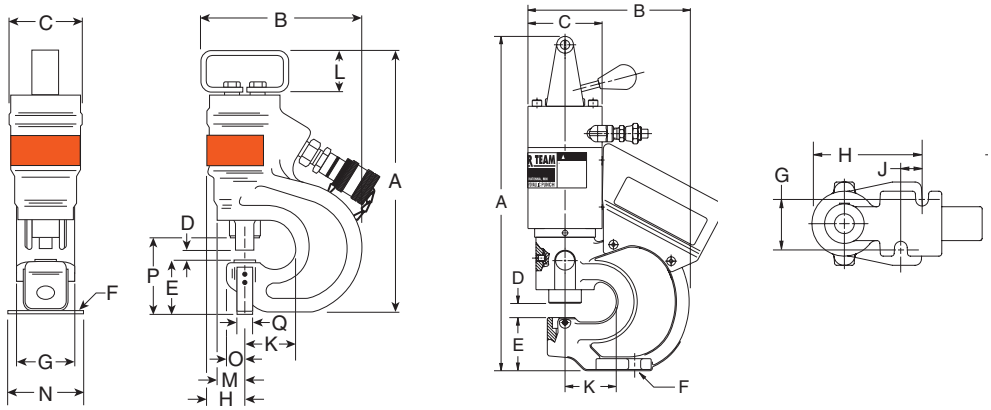

Cap.	Order Number	Max. Oper. Press. (bar)	Oil Cap. (cm³)	Max. Material hickness (mm)	A (mm)	B (mm)	C (mm)	D (mm)	E (mm)	Mtng. Holes F (mm)	G (mm)	H (mm)	J (mm)	Max. Throat Depth K (mm)	L (mm)	M (mm)	N (mm)	O (mm)	P (mm)	Q (mm)
20	**HP20**	700	64	12,7	419	202	93	16	66	14	54	124	24	57	—	—	—	—	—	—
35	**HP35**	700	75	12,7	349	229	95	14	73	6	76	46	—	71	57	38	89	22	102	19

POWER TEAM

No. HP20 – Basic punch. Wt., 15 kg.

No. HP20S – Punch frame with cylinder, valve, handle, two coupling nuts, plus five punch and die sets in 6,4 7,9 ,9,5 ,11,1 and 13,5mm dia.Wt. 15,9 kg .

No. HP20SP* – Complete punch set with PE102AR pump (115/230V, 50/60 Hz), HP20HS hand switch, 9682 nipple, two 9792 female couplers and two 9793 male couplers. Also includes two 9758 3 m hoses, 9680 coupling, and same punch and die sets as in HP20S (above). Tool is completely assembled and pre-filled with oil. In storage box. Wt., 15,9 kg.

HP20

Punch Set HP20SP
Includes the PE102AR pump, HP20HS hand switch, hoses, couplers, punch and die sets in sizes 6,4, 7,9 ,9,5 ,11,1 , and 13,5 mm diameter, with storage box Wt.15,9 kg.

Flat Die

Coupling Nut

Punch

PUNCH/DIE SETS FOR HP20 & HP35 HYDRAULIC PUNCHES

For use with HP20 Hydraulic Punch						For use with HP35 Hyd. Punch	
Punch Size (mm)	Punch Style	Punch No.	Flat Die No.	Bevel Die No.	Coupling Nut No.	Punch/w Flat Die Set	Punch/w Bevel Die Set
6,4	○ Round	251970	251983	—	252001	—	—
7,9		251971	251984	—	252001	PD313	—
9,5		251972	251985	251996	252001	PD375	PD375B
11,1		251973	251986	251997	252001	PD437	PD437B
13,5		251974	251987	251998	252001	PD531	PD531B
14,3		251975	251988	251999	252001	PD562	PD562B
17,5		251976	251989	—	252001	PD688	—
19,8		251977	251990	—	252002	PD781	—
20,6		251978	251991	—	252002	PD812	—
12,7	□ Square	251979	251992	—	252002	—	—
13,5		251980	251993	—	252002	—	—
6,4 x 19	⬭ Obround	251981	251994	—	252002	—	—
9,5 x 19		251982	251995	—	252002	—	—

TYPICAL 20 TON STYLE TOOLING

Punch Size (mm)	INCHES Hole Dia.	INCHES Bolt	MM Hole Dia.	MM Bolt
6,4	1/4	#10	6.3	—
8,0	5/16	1/4	7.9	—
9,5	3/8	5/16	9.5	M8
11,1	7/16	3/8	11.2	M10
13,5	17/32	7/16	13.5	M12
14,3	9/16	1/2	14.3	—
17,5	11/16	5/8	17.5	M16
19,8	25/32	—	19.8	M18
20,6	13/16	3/4	20.6	—

HP20FS

HP20HS

252000

ACCESSORIES FOR HP20 HYDRAULIC PUNCH

No. HP20FS – Optional foot switch mounted in foot switch guard. Supplied with 3 m cord and male remote connector. Wt., 0,9 kg.

No. HP20HS – Replacement handswitch. Supplied with 3 m cord and male remote connector. Wt., 0,9 kg.

No. 252000 – Optional coupling nut wrench. Makes punch/die changes easier without "rounding- off" coupling nuts. Wt., 0,3 kg.

TECH DATA
Page 238

Testers
HYDRAULIC

200, 300 and 750 l/min

HT50A

HT200

HYDRAULIC TOOLS

200 , 300 AND 750 L/MIN IN-LINE HYDRAULIC TESTERS

- Accurately measure oil flow, pressure and temperature on in-plant equipment, forklifts, machine tools and more.
- Temperature and flow readings are in Metric and English, accurate to within ±2% of full scale.
- Dual pressure gauges for high and low pressure readings; low pressure gauge is automatically shut off and protected as pressure rises beyond its maximum reading.
- Automatic pressure compensating feature lets you increase flow without affecting pressure setting.
- Reverse flow through tester will not cause damage; replaceable safety disc ruptures if pressure exceeds upper limit.
- Solid state voltage regulator eliminates errors caused by voltage change during testing.
- Troubleshoots systems with capacities to 750 l/min at pressures less than 350 bar. Accurately measure oil flow to ±5%, pressure to within 2% and temperature readings within 1%.
- Pressure gauge is liquid filled to damp-en system pulsation.

For more precise low pressure readings, an optional dual pressure gauge kit is available (see page 183).

No. HT50A – Hydraulic circuit tester with single liquid filled pressure gauge, 0-5000 psi, 0-350 bar. Includes two adapter unions for 3/4" male NPTF fittings. Wt., 16,8 kg.

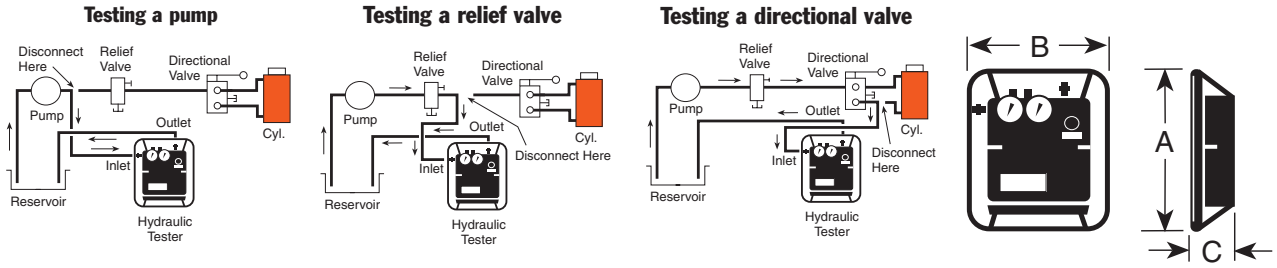

Order Number	Max Flow (l/min)	Scale	Flow Ranges (gpm)	Flow Ranges (l/min)	Max. Oper. Pressure psi	Max. Oper. Pressure (bar)	Temp. Scale Range °F	Temp. Scale Range °C	Port Sizes	Weight lbs.	Weight kg.	A in. (mm)	B in. (mm)	C in. (mm)
HT50A	200	—	0-50	0-200	5,000	345	20-240	-6 to 114	1 1/16-12UN Female "O" Ring with Union Adapt. 3/4" Female NPTF	30.3	16.8	12 1/4 (311)	6 1/4 (159)	10 (255)
HT75	300	High Low	15-75 3-15	50-300 10-60	5,000	345	100-250	40-120	3/4" NPT Swivel	18.2	8.6	13 3/4 (349.25)	11 7/8 (301.62)	5 3/4 (146.05)
HT200	750	High Low	25-200 5-40	100-750 20-150	5,000	345	100-250	40-120	1 1/2"* SAE Split Flange	28.2	13.6	15 7/8 (403.47)	13 1/4 (336.55)	6 3/4 (171.45)

For a complete listing of accessories for the HT series of hydraulic system testers, see pages 193-194.
*Not included, must be ordered separately, see page 194.

POWER TEAM

DUAL GAUGE CONVERSION KIT FOR 50 GPM TESTER.

Provides more precise low pressure readings. Remove pressure gauge block and gauge from tester and replace it with this block. Install high pressure gauge from tester (350 bar) onto this new block.

No. 307281 – Dual gauge conversion kit. Consists of gauge mounting block, pulsation dampener, thermal overload protector, low pressure gauge and gauge protector. Wt. 0,45 kg.

307281

307281 Low pressure gauge calibrated 0-600 psi 0-42 bar.

37045

Auxiliary power cord for use with 300 and 750 l/min testers

No. 37045 – Auxiliary power cord. For use with any 12 or 24 volt battery to remotely power tester. Wt. 0,5 Kg. CAUTION: For use on negative ground systems only.

9785
9786
8987
9788

Hoses

No. 9785 – Hose, 19,1 mm I.D. x 3/4" NPTF male both ends. 3 m length. 155 bar working pressure. (2 req'd on 200 and 300 l/min testers) Wt., 3kg.

The following hose assemblies are all 4-ply spiral wound wire, 3 m long. For use with 750 l/min testers.

No. 9786 – Hose, 25,4 mm I.D. x 11/4" NPT male both ends. Recommended max. flow 340 l/min, with a working pressure of 280 bar. Wt., 6,3 kg.

No. 9787 – Hose, 31,8 mm I.D. x 11/4" NPT male both ends. Recommended max. flow 530 l/min, with a working pressure of 210 bar. Wt., 6,4 kg.

No. 9788 – Hose, 38,1 mm I.D. x 11/2" NPT male both ends. Recommended max. flow 750 l/min, with a working pressure of 175 bar. Wt., 11,4 kg.

203264

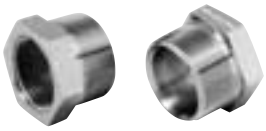

Hose reducer bushings

No. 203264 – Consists of two hose reducer bushings, 11/4" NPT female x 11/2" NPT male end. Needed to adapt No. 9786 25,4 mm I.D. hose and No. 9787 31,8 mm I.D. hose to tester. Wt., 1 kg.

Hydraulic Tester
SERVICE ACCESSORIES

Fittings/adapters For the 750 l/min hydraulic tester

Attach to the HT200 hydraulic tester by the use of flanged-head adapters and split flanges, or by a set of female straight adapters.

HYDRAULIC TOOLS

FLANGED HEAD ADAPTER UNIONS AND SPLIT FLANGE KIT

No. 203154 – Straight flange adapter. 38,1 mm flanged-head to 11/2" NPSM female swivel. Wt.,1 kg.

No. 203155 – 45° flange adapter. 38,1 mm flanged-head by 11/2" NPSM female swivel. Wt., 1,5 kg.

No. 203156 – 90° flange adapter. 38,1 mm flanged-head by 11/2" NPSM female swivel. Wt., 1,9 kg.

No. 203017 – Split flange kit. Consists of four flange halves and attaching bolts to permit use of 38,1 mm I.D. flange adapters listed at left. Wt., 1.3 kg.

203154 203155 203156

203017 203003

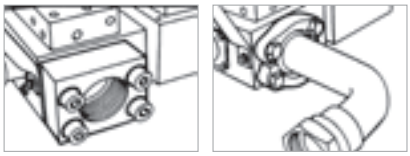

FEMALE STRAIGHT FLANGE ADAPTER

No. 203003 – Consists of two female straight flange adapters with attaching bolts. When attached to inlet/outlet ports, allows connection of 11/2" NPT male hose ends to tester. Wt., 3.9 kg.

HYDRAULIC FITTINGS FOR USE WITH ALL TESTERS.

No. 16954 – 90° swivel adapter, 3/4" NPTF male x 3/4" NPSM female. Wt., 0.4 kg.

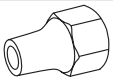

No. 22041 – Coupler, 3/4" NPTF male x 3/4"–16 female ORB. Wt., 0.2kg.

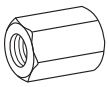

No. 22042 – Coupler, 3/4" –16 female ORB x 1 1/16"–12 female 37° JIC. Wt., 0.2kg.

No. 22043 – Coupler, 3/4" –16 female ORB x 9/16"–18 female 37° JIC. Wt.,0,2kg.

No. 22044 – Coupler, 3/4" –16 female ORB x 1/2"– 20 female 37° JIC. Wt., 0,2 kg.

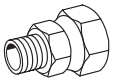

No. 27737 – Swivel adapter, 3/4" –16 male x 3/4" NPSM female. For use with No. 9785 hose, which has 3/4" NPTF male thread. Wt., 0.1kg.

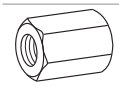

No. 27287 – Coupler, 3/4" –16 UNF female ORB x 7/8"–14 UNF female 37° JIC. Wt., 0.2kg

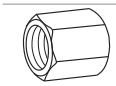

No. 13449 – Cap, 1 1/16"–12 UNF female, 3/4" O.D. tube, 37° flare. Wt., 0.1kg.

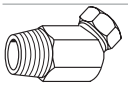

No. 26068 – 45° swivel adapter, 1" NPTF male x 3/4" NPSM female. Wt., 0,4 kg.

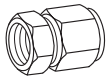

No. 26069 – Swivel adapter, 1" NPTF female x 3/4" NPSM female. Wt., 0.2 kg.

No. 26070 – Adapter, 1" NPTF male x 3/4" NPTF female. Wt., 0.1kg.

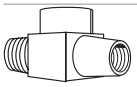

No. 26071 – Service tee, 3/4" NPTF female (2) x 3/4" NPTF male. Wt., 0.4 kg.

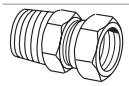

No. 26072 – Swivel adapter, 3/4" NPSM female x 1/2" NPTF male. Wt., 0,2kg.

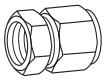

No. 26073 – Swivel adapter, 3/4" NPTF female x 1/2" NPSM female. Wt., 0.1 kg.

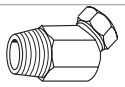

No. 26074 – 45° swivel adapter, 3/4" NPSM female x 3/4" NPTF male. Wt., 0.3kg.

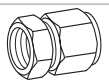

No. 26075 – Swivel adapter, 3/4" NPSM female x 3/4" NPTF female. Wt., 0.2 kg.

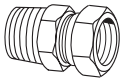

No. 26076 – Swivel adapter, 3/4" NPTF male x 3/4" NPSM female. Wt., 0.2kg.

No. 26077 – Cap, 3/4" NPTF. Wt., 0.3kg.

No. 26078 – Plug, 3/4" NPTF. Wt., 0.1 kg.

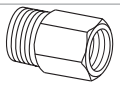

No. 26079 – Adapter, 3/4" NPTF female x 1 1/16" –12 male ORB. Wt., 0.2 kg.

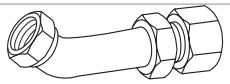

No. 208402 – 45° union adapter, 7/8"–14 UNF male 37° JIC x 3/4" NPTF female. 210 bar working pressure. Wt., 0,3 kg.

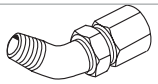

No. 208401 – 45° union adapter, 7/8"–14 UNF male 37° JIC x 3/4" NPTF female. Wt., 0,4kg.

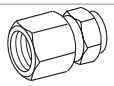

No. 206753 – Coupler, 1 15/16"–12 UNF female 37° JIC x 3/4" NPTF female. Wt., 0,5 kg.

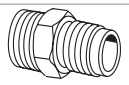

No. 26666 – Connector, 1 5/16"–12 UNF male 37° JIC x 3/4" NPTF male. Wt., 0.2 kg.

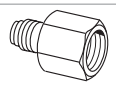

No. 28984 – Straight adapter, 3/4" NPTF female x 1 3/16" –12 UN male 37° JIC. Wt., 0.3 kg.

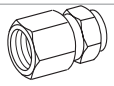

No. 28985 – Straight adapter union, 1 3/16"–12 UN female 37° JIC x 3/4" NPTF female. Wt., 0,6 kg.

POWER TEAM

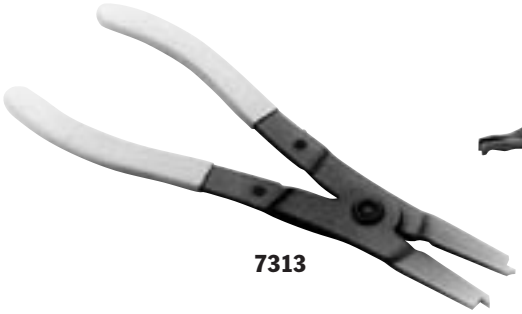

7313

714
Fed. Spec.:
GGG-P-480

Retaining Ring
PLIERS

Internal and External

HORSESHOE LOCK RING PLIER

- For removing horseshoe lock rings used on hydraulic brakes, differentials, etc. Plier is 203mm long; max. spread: 23,8mm

No. 714 – Horseshoe lock ring plier. Wt., 0.2 kg.

No. 7313 – External snap ring plier easily removes snap rings used to retain bearings on shafts. Max. spread: 27mm.

RETAINING RING PLIER KITS

- Choose from four sets; internal ring, external ring and convertible pliers for either internal or external rings.

No. 7053K – Replaceable tip pliers kit. This versatile kit contains (1) internal and (1) external pliers with (8) tip sets. Two sets each: 0,9 mm dia. 90° bend, 1,2 mm dia. straight, 1,2 mm dia. 90° bend, 1,8mm dia. straight. Recommended for 6,4 –51 mm rings. Packaged in plastic storage case. Wt., 0.3 kg.

No. 15702 – Replaceable tip kit (only) for No. 7053K.

No. 7123K – Convertible pliers kit. Contains **No. 1120** (1mm dia./straight tip) and No. 1340 (1,8mm dia./straight tip). Each pliers "converts" to handle both internal and external rings. Packaged in a reusable plastic storage case. Wt., 0,4Kg.

No. 7125K – Convertible pliers kit. Contains **No. 1125** (1 mm dia./45° bent tip) and No. 1345 (1,8 mm dia./45° bent tip). Each pliers "converts" to handle both internal and external rings. Packaged in a reusable plastic storage case. Wt., 0.4kg.

No. 7406K – Professional pliers kit. Contains (6) retaining convertible pliers to handle both internal and external rings from 6,4–51 mm. Includes straight and 90° off-set pliers with 1, 1,2, and 1,8 mm tip diameters. Includes Nos. 1120, 1131, 1320, 1329, 1340 and 1349. Packaged in an impact resistant storage case. Wt., 0,9 kg.

REPLACEMENT TIPS FOR 7300 AND 7301 PLIERS

No. 209201 – Replacement tips (pr.) for the 7300 and 7301 pliers. Wt., 0.1 kg.

7053K internal & external plier, 4 sizes of tips.

7123K

7406K

RETAINING RING PLIERS SELECTION GUIDE

Plier No	Tip .Bend	Tip Size Dia. (mm)	For Int'l Rings* Bore Dia. (mm)	For External Rings* Shaft Dia. (mm)
0100	Str.	1	9,5 – 26	—
0200	Str.	1	—	6,4 – 22
0300	Str.	1,8	27 – 44,5	—
0400	Str.	1,8	—	24 – 36,5
0500	Str.	2,3	46 – 89	—
0600	Str.	2,9	—	38 – 89
7300	Str.	3	78 – 152	—
7301	Str.	3	—	38 – 165
		Convertible Pliers		
1120	Str.	1	9,5 – 14	6,4 – 17
1125	45°	1	9,5 – 14	6,4 – 17
1131	90°	1	9,5 – 14	6,4 – 17
1320	Str.	1,2	16 – 26	17 – 22
1329	90°	1,2	16– 26	17 – 22
1340	Str.	1,8	27 – 44,5	24 – 36,5
1345	45°	1,8	27 – 44,5	24 –36,5
1349	90°	1,8	27 – 44,5	24 – 36,5

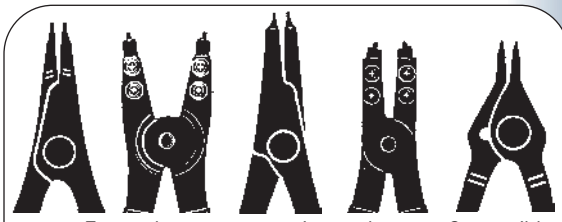

External		Internal		Convertible
No. 0200	No. 7301	No. 0100	No. 7300	No. 1120
No. 0400		No. 0300		No. 1320
No. 0600		No. 0500		No. 1340
				No. 1125*
				No. 1345*
				No. 1131**
				No. 1329**
				No. 1349**

Fed. Spec.: GGG-P-480-E

* 45° Angled Tips ** 90° Angled Tips

Always wear safety goggles when using pliers

*Capacities are shown for basic style rings.

3344A

PHOTO TACHOMETER

- Infrared light source, micro-processor controlled crystal display.
- Strong magnetic base is included.

Machine speed: It is critical for proper machining operations. Speeds too fast or too slow can shorten tool life and cause expensive, unnecessary machine down-time. This digital photo tach can take readings from revolving shafts on drill presses, grinders, lathes and other machines. It can also be used to check engine operation on in-plant vehicles like forklifts. The 3344A is accurate to within ± 1 rpm. The 10mm high liquid crystal display is easily visible even in high ambient light areas.

No. 3344A – Digital Photo Tachometer. With memory, photo probe assembly, magnetic base, 2,75 m of reflective tape and plastic case. Wt., 2 kg.

No. 39811 – Replacement magnetic base assembly. Wt. 0,1kg.

No. 45329 – Replacement photo probe assembly. Wt., 0.2 kg.

No. 204666 – Replacement retro-reflective indicator tape, 2,75 m long x 12,7mm wide. Wt., 0.1 kg.

SPECIFICATIONS

Readout: Liquid crystal display: 4 (10mm high) digits, low battery indicator, memory mode indicator, high and low RPM memory mode indicator.
Range: 200 to 9999 rpm. Accuracy: ± .25%, ± 1 rpm. Update time: 3/4 second.
Power switch: Membrane switch (automatic shut-off after one minute of no signal input).
Power source: 9 volt alkaline battery. Light source: Infrared with 4,6m plug-in cable.
Light holder assembly: 13,6 kg rated magnet; 50,8 mm dia. x 6,4 mm high (102 mm high overall with post).
Size: 86 w, 152 h x 38 mm d.
Carrying case: 343 w, 254 h x 102 mm d.

HTS50 HEAVY-DUTY PIPE SEALANT WITH TEFLON®

- Seals new or damaged threads; resists water, chemicals and oils.
- Replaces conventional tape methods; forms a clog-free seal. Effective at 700 bar.

When "plumbing" a hydraulic system, there's now a better answer than tapes which can tear or shred, possibly plugging filters, valves or gauges. This compound combines the lubricating qualities of Teflon® with a fast curing anaerobic sealant. Seals all metal fittings, plugs and threaded joints quickly and easily. Cures to form a permanent seal which is inert to hydrocarbons, most acids, chemicals, solvents and steam. Allows adjustment up to 16 hours after assembly; cannot loosen under vibration. Prevents galling of mating parts upon disassembly. Withstands temperatures from -54° to + 190° C.

No. HTS50 – Sealant, 50 ml. tube. Wt., 0.2 kg.

(Teflon® is a registered trademark of duPont Co.)

HTS50

"O" RING SEAL PICKS

Even the seemingly simple job of removing and installing "O" ring seals can be difficult without the aid of the proper tool. The 7312 all metal "O" ring seal pick does the job with ease. Two special picks in set No. 7103 get right to the trouble areas.

No. 7312 – "O" ring seal pick. Wt., 0.1 kg.

No. 7103 – Set of two "O" ring seal picks. Wt., 0.1 kg.

7312

7103

UNIVERSAL OUTSIDE THREAD CHASER

Restore damaged threads on shafts, housings, cages, etc., for re-assembly of matching parts. Eliminates need for thread-cutting equipment. Will not harm threads. V-pads and dies can be replaced. Cap. 32 to 127 mm O.D.

No. 7402 – Thread chaser, complete (with 6 dies: threads per inch – 4, 5, 6, 7, 7½, 8, 9, 10, 11, 11½, 12, 14, 16, 18, 20 and 24). Wt., 0,2 kg.

No. 202817 – Metric die set (3 dies: mm per thread: 1, 1¼, 1½, 1¾, 2, 2½, 3, 3½, and 4). Wt., 0.1 kg.

7402

MAGNETIC PICK-UP TOOL

Has permanent magnetic head for retrieving parts from otherwise inaccessible places.

No. 7395 – Pick-up tool with pocket clip. 152 mm lg. Wt., 0.1 kg.

7395

RATCHETING CHAIN WRENCHES

Special head design allows you to turn wrench in either direction. Ratcheting action makes it possible to re-grip without removal. For parts of most any size and shape.

No. 7400 – Chain wrench, cap. 12,7 to 121 mm O.D. (Capacity= 450 Nm) Wt., 0,9kg

No. 7401 – Chain wrench, cap. 76 to 171 mm O.D. (Capacity= 900 Nm) Wt., 2,3 kg.

No. 209199 – Replacement chain with pin for No. 7400 chain wrench (406 mm long).

No. 209200 – Replacement chain with pin for No. 7401 chain wrench (610 mm long).

ADJUSTABLE HOOK SPANNER WRENCH

Needed wherever turret adjusting nuts or packing gland nuts are used. Cap.: 38 to 102 mm. Handle overall length: 483 mm.

No. 885 – Adjustable hook spanner wrench. Wt., 1,4 kg.

ADJUSTABLE HOOK SPANNER WRENCHES

Replace many fixed-size wrenches… cover range of capacities needed to service industrial tractors and other equipment. Drop-forged jaws adjust to eleven positions for a capacity of 121 to 324 mm O.D. Handle overall length: 610 mm; diameter: 25,4 mm.

No. 7307 – Spanner wrench with one 9,5 mm thick jaw. Wt., 3,3 kg.

No. 7308 – Spanner wrench with two interchangeable jaws: one 9,5 mm thick, one 19 mm thick. Wt., 5 kg

HEAVY-DUTY ADJUSTABLE SPANNER

Extra heavy construction. Has one 19 mm thick, eleven-position hook-jaw for a capacity of 131 to 324 mm O.D. Drop-forged. Handle length: 654 mm; handle dia.: 33.3 mm

No. 7309 – Heavy duty adjustable hook spanner wrench. Wt., 5 kg.

ADJUSTABLE GLAND NUT WRENCH

Designed to handle 51 to 152 mm dia. hydraulic cylinder gland nuts on many construction vehicles. Fits 6,4 and 7,9 mm dia. pin holes; features a 3/4" sq. drive.

No. 1266 – Adjustable gland nut wrench. Wt., 1,4 kg.

No. 204928 – Replacement pin for No. 1266

PRY BARS

Our rolling head pry bars are an extremely popular and useful tool. Head may be used for almost any prying job since a great deal of leverage can be obtained. Long tapered body may be used as a lining-up drift.

No. 7162 – Pry bar; 9,5 mm round, 152 mm long. Wt., 0,1 kg.

No. 7163 – Pry bar; 11,1 mm round, 305 mm long. Wt., 0,3 kg.

No. 7164 – Pry bar; 14,3 mm round, 406 mm long. Wt., 0,5 kg.

No. 7165 – Pry bar; 19 mm round, 457 mm long. Wt., 1 kg.

JIMMY BARS

Ideal for general lifting or prying. Heat treated chrome alloy steel to resist bending or breaking.

No. 7166 – Jimmy bar; 15,9 mm round, 457 mm long. Wt., 0,6 kg.

No. 7167 – Jimmy bar; 19 mm round, 610mm long. Wt., 1,1 kg.

No. 7168 – Jimmy bar; 22,2 mm round, 762 mm long. Wt., 1 kg.

"MAJOR PERSUADER" JIMMY BARS

Two big jimmy bars for big jobs. Forged from chrome alloy steel.

No. 7420 – Jimmy bar; 22,2 mm round, 1.168 mm long. Wt., 3,4 kg.

No. 7421 – Jimmy bar; 25,4 mm round, 1.372 mm long. Wt., 1,9 kg.

BEARING MAINTENANCE

Puller selection

3 Basic Puller Problems

CONSIDERATIONS:

Determine the type of puller or puller combination. Which puller type is best suited for gripping the part?

Is a combination of puller types required?

Determine the reach needed for your particular pulling problem. The puller you select must have a reach equal or greater than the corresponding sizes of the part to be pulled.

Determine the spread need. The spread is determined by the width of the part being pulled. The puller's spread should be greater than the width of the part to be pulled.

Estimate the force needed to solve your pulling problem. A puller with the proper reach and spread will usually have enough capacity to remove the corresponding part. When in doubt, always use a puller with a larger capacity than what may be needed. Rusted parts or parts with a large area of resistance may need more pulling force.

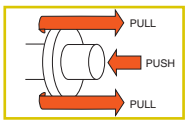

1

PULLING A GEAR, BEARING, WHEEL, PULLEY, ETC., FROM A SHAFT

In order to perform a proper pull, be certain that you firmly grip the gear, bearing, wheel, pulley, etc., and apply force to the shaft. Use a 3-jaw puller, instead of a 2-jaw, whenever possible for better gripping power and a more uniform displacement of pulling force.

RECOMMENDED TOOLS:

Jaw-type pullers: Either manual or hydraulic. For extra force and convenience, use a hydraulic puller. Both are available in 2 or 3 jaw configurations and are used to grip the outer circumference of a part or can be used with a pulling attachment, such as a bearing/pulley attachment. **(pages 204-205, 218-219, 220-221, 230-231)**

Push-Pullers can thread directly into a threaded part for easy and secure removal. Push-Pullers can be used in conjunction with bearing/pulley attachments which grip the part from behind. A wide assortment of male and female threaded adapters are available as well as metric adapters. **(pages 206-207, 222-223)**

Slide hammers are best suited for light-duty tasks. Slide hammers can be used for multiple-with pulling problems when combined pulling attachments. **(pages 210-212)**

Bearing/pulley attachments provide a "knife-like" edge to get behind parts for added versatility and secure removal of parts. Great for parts that don't offer adequate grip with jaw-type pullers. **(page 209)**

Adapters Whether you need an adapter compatible with any number of threaded hole sizes, protection of part to be pulled or for assisting the installation of a component; Power Team offers a variety of adapters to assist in the removal or installation of parts. **(pages 214-215)**

2

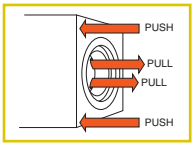

PULLING INTERNAL BEARING RACES, RETAINER, SEALS, ETC.

By extending the narrow jaws of an internal pulling attachment through the center of the part to be pulled, a straight pull is insured, and damage to the housing is avoided. While parts within a "blind hole" in a housing do present a problem, Power Team has the internal pulling attachment or a combination of an internal pulling attachment and puller to handle the situation.

RECOMMENDED TOOLS:

Internal pulling attachments have narrow jaws which extend through the center of the part to be pulled. They provide a straight pull and avoid damaging housings. Internal attachments feature adjustable jaws to fit various diameter parts. **(page 208)**

Slide hammer with internal attachment is ideal for removing parts from blind holes, especially where there is no housing to brace puller legs against. **(pages 210-211)**

Push-puller with internal attachment. Push-puller is available in both manual and hydraulic versions. **(pages 206-207)**

3

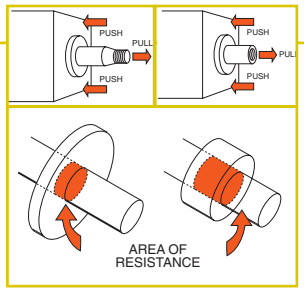

PULLING A PRESS-FITTED SHAFT FROM A HOUSING

Note: Manual pullers require that the shaft being pulled is no more than twice the diameter of the puller's forcing screw. To determine the recommended tonnage for hydraulic pullers, multiply the diameter of the shaft to be pulled by ten. Example: For a 1" shaft, we recommend 10 tons of pulling force.

A shaft with a threaded end can be removed without damage by using one of our slide hammer, manual Push-puller or hydraulic Push-pullers, in conjunction with the proper threaded adapter. Removal is easy! If the shaft to be removed has external threads, simply choose one of our female threaded adapters of proper size/thread. If the shaft has internal threads, simply choose the correct size male threaded adapter.

RECOMMENDED TOOLS:

Slide hammer puller matched with a set of threaded adapters is a perfect tool for light duty pulling needs. **(pages 210-211, 214-215)**

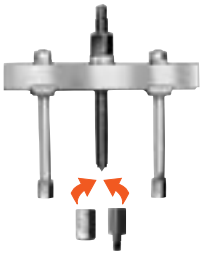

Push-pullers matched with a set of threaded adapters make for an extra versatile pulling tool. **(pages 206-207, 214-215, 222-223)**

Puller selection

Choosing the Right Puller

WHY OUR ROLLED PULLER THREADS ARE SUPERIOR:

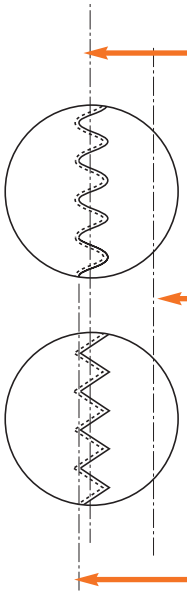

Pitch diameter of thread

Rolled threads start with a material O.D. equal to the pitch diameter of the thread. The rolling process moves material from below the pitch diameter and creates a smoother and stronger thread.

Centerline of screw

Cut threads start with a material O.D. equal to the thread O.D.. Cutting can cause tears on the thread surface which can make it rough and can cause minute cracks at root of thread which can open up during heat treat and lessen the capacity of the screw.

Outside diameter of thread

Puller with a bearing pulling attachment was used to take a bearing off a utilities well pump motor.

Features	Benefits
• Grip-O-Matic® feature on jaw type pullers • 2-way, 3-way and 2/3-way combination pullers 1 to 37 ton mechanical pullers 5 to 50 ton hydraulic pullers 2 1/8" (54 mm) to 27 5/8" (702 mm) reach 3 1/4" (83 mm) to 44" (1,118 mm) of spread • Forged alloy steel jaws • Machined puller jaw toes • Alloy steel heads (forged or flame cut) • Rolled "V" threads • Special coating on threads • Heat treated alloy steel cross bolts • Standard hydraulic cylinders on Grip-O-Matic® series • Adjusting nut on Super Grip-O-Matic® series	• The harder the pulling force, the tighter the jaws grip • A wide variety of pullers; select a specific puller for a specific application or select one or more pullers for general applications • Strongest possible part; the grain of the material follows the contour of the part. • Larger and stronger pulling toe than most competitors • Heat treated and designed for maximum strength • Stronger and smoother than cut threads • Resists corrosion, traps lubrication better than black oxide • Designed for max. shear strength • Cylinder can be removed from puller and used in other hydraulic applications • Allows for controlled jaw spread adjustment

NOTE: The puller application photos shown in this catalog are shown without protective blankets for clarity of photos. Power Team strongly recommends you always make your pull with a protective device in place.

Operator safety comes first!

Tons of force are being exerted with your Pulling System. You must respect this force, and observe safety precautions at all times

⚠ CAUTION

It is impossible to predict the exact force required for every pulling job: setup requirements and the size, shape and condition of the parts being pulled vary a great deal. In addition, the Power Team Pulling System is so versatile, it is possible that components in a pulling setup may have different tonnage ratings.

The lowest "capacity" component, then, determines the capacity of the setup. For example: When an accessory with a 1 ton capacity is used with a 10 ton capacity puller, the setup can be used only at a force of one ton.

These tools should be used only by trained personnel familiar with them.

Always wear eye protection during a job since work parts, or the pulling tool itself, may break and parts may fly. It is recommended to cover the work with a Power Team Protective Blanket or use a shield while force is being applied. If you are at all unsure which tool or attachment to select, contact the Power Team factory.

A few easy tips to remember:

1. **Wear safety glasses at all times!** You have only one pair of eyes, so protect them from possible flying parts.
2. **Keep your pulling tools in shape!** Clean and lubricate the puller's forcing screw frequently, from threads to tip, to assure long service life and proper operation.
3. **Cover work with a protective blanket!** With high forces being exerted on the part being pulled, breakage may sometimes result. By covering the work with a protective blanket, the mechanic reduces the danger of flying parts.
4. **Apply force gradually!** The component should give a little at a time. Do not try speed removal by using an impact wrench on the puller screw.
5. **Use the right size puller!** If you have applied maximum force and the part has not moved, go to a larger capacity puller. Resist sledging.
6. **Align puller legs and jaws!** Be sure the setup is rigid and that the puller is square with the work.
7. **Mount puller so grip is tight!** Tighten the adjusting strap-bolts when using a jaw type puller. Always use a 3-jaw puller whenever possible. A 3-jaw puller gives a more secure grip, more even pulling power. Apply force gradually. — Never use an extension on a wrench. — Never use an impact wrench. — Never strike the end of the forcing screw. Always cover work with a protective blanket.
8. **Do not couple puller legs!** The tonnage capacity of a Push-Puller® is reduced when longer than standard legs are used, or when legs are in compression. The chance of breaking, bending or misaligning legs increases. Keep reach to a minimum. Use shortest legs possible to reach workpiece. Thread legs into workpiece, pulling attachment or adapters evenly. Uneven legs will cause greater pull or push on one side, creating a bending action which could cause damage to work piece or cause a leg to break. The sliding plates must always be on the opposite side of the cross block from the forcing screw nut or hydraulic cylinder. Always cover work with a protective blanket.

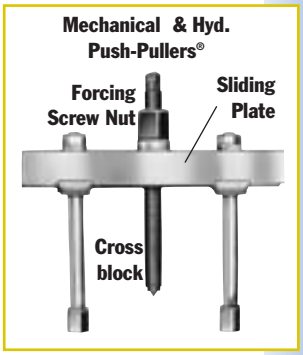

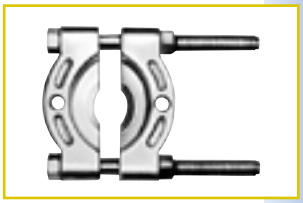

Bearing pulling attachments:

These attachments may not withstand the full tonnage of the pullers with which they are used. The shape and condition of the part being pulled affects the tonnage at which the puller blocks and/or studs may bend or break. Always select the largest attachment which will fit the part to be pulled.

Mechanical
JAW PULLERS

1-25 Ton
2 & 2/3 Jaw Pullers

Pullers designed to pull gears, bearings and countless other press fitted parts.

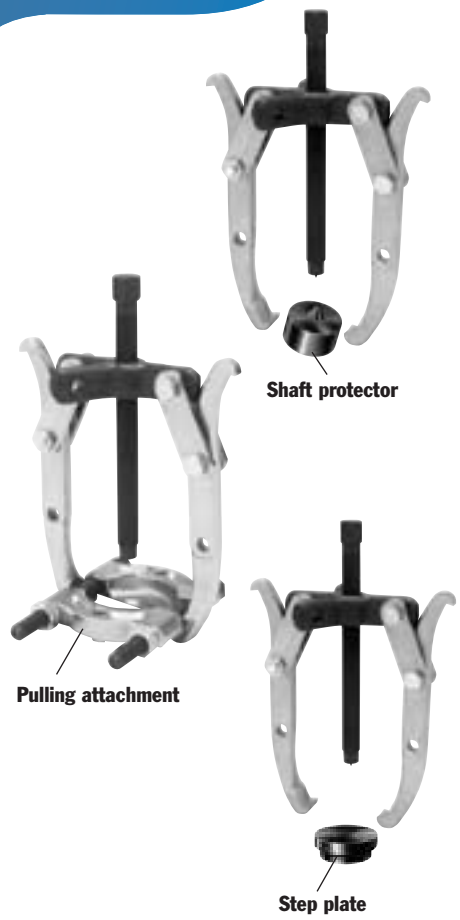

- Grip-O-Matic® feature on all pullers. The harder the pull, the tighter the grip for removing gears, bearings and countless other press fitted parts.
- 2-way, 3-way and 2/3 way combination pullers make it easy to select a specific puller for a specific application.
- Forged from high quality steel, heat treated and subjected to rigorous tests which exceed rated puller capacity.

Choosing the right size puller: Compare the "reach" and "spread" of the pulling job with that of the pullers listed. The puller selected must have dimensions greater than those of the job.

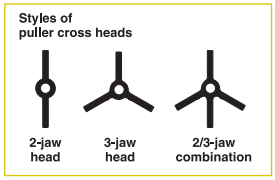

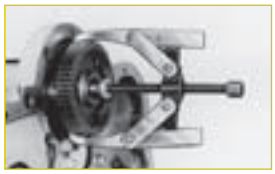

Fed. Spec.: GGG-P-00781-D

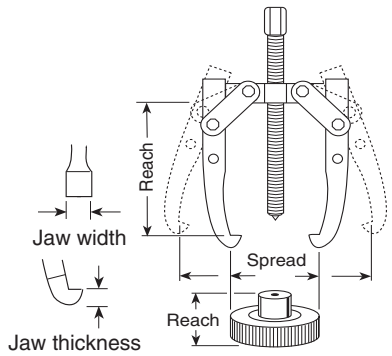

	Order No.	Max. Reach (mm)	Max. Spread (mm)	Screw Size (in.)	Jaw Thickness (mm)	Jaw Width (mm)	Capacity, Style and Weight
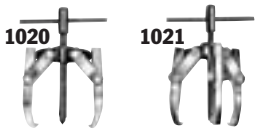 1020 1021	**1020**	54	82,6	5/16–24 x 98,4 mm	3,5	6,4	1-Ton, 2-Jaw; 0,14 kg
	1021	54	82,6	5/16–24 x 98,4 mm	3,5	6,4	1-Ton, 3-Jaw; 0,23 kg
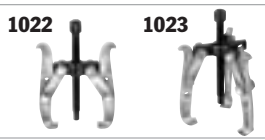 1022 1023	**1022**	85,7	101,6	3/8–24 x 124 mm	Upper 4,8 Lower 3,2	Upper 6,4 Lower 12,7	2-ton, 2-Jaw; 0,4 kg (Reversible Jaws)
	1023	85,7	121	3/8–24 x 124 mm	Upper 4,8 Lower 3,2	Upper 6,4 Lower 12,7	2-ton, 2/3-Jaw; 0,6 kg (Reversible Jaws)
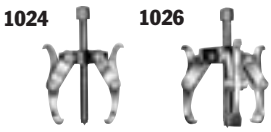 1024 1026	**1024**	83	152	9/16–20 x 176 mm	Upper7,9 Lower 6,4	Upper 9,5 Lower 19,1	5-Ton, 2-Jaw; 0,8 kg (Reversible Jaws)
	1026	83	178	9/16–20 x 176 mm	Upper 7,9 Lower 6,4	Upper 9,5 Lower 19,1	5-Ton, 2/3-Jaw; 1,3 kg (Reversible Jaws)

POWER TEAM®

- Alloy steel heads are forged for maximum strength.
- Forcing screw threads are rolled, not cut. This process creates a smoother and stronger thread.
- Heat treated alloy steel cross bolts for maximum shear strength.
- Machined puller jaw toes produce larger and stronger pulling toes.

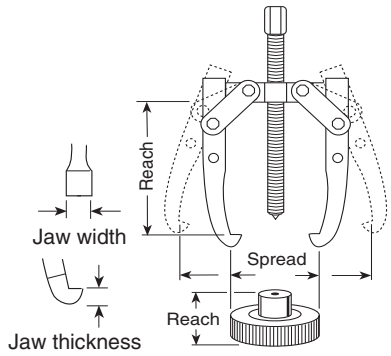

	Order No.	Max. Reach (mm)	Max. Spread (mm)	Screw Size (in.)	Jaw Thickness (mm)	Jaw Width (mm)	Capacity, Style and Weight
 1025 1027	**1025**	140	152	9/16–20 x 176 mm	Upper7,9 Lower 6,4	Upper 9,5 Lower 19,1	5-Ton, Long 2-Jaw; (Reversible Jaws) 0,9 kg
	1027	140	178	9/16–20 x 178 mm	Upper 7,9 Lower 6,4	Upper 9,5 Lower 19,1	5-Ton, Long 2/3-Jaw; (Rev. Jaws) 1,5 kg
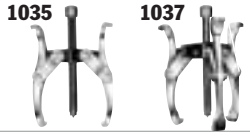 1035 1037	**1035**	127	229	11/16–18 x 229 mm	Upper7,9 Lower 8,7	Upper 25,4 Lower 25,4	7-Ton, 2-Jaw; (Reversible Jaws) 2 kg
	1037	127	267	11/16–18 x 229 mm	Upper 7,9 Lower 8,7	Upper 25,4 Lower 25,4	7-Ton, 2/3-Jaw; (Rev. Jaws) 2,8 kg
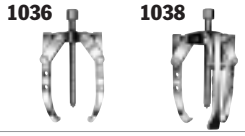 1036 1038	**1036**	222	241	11/16–18 x 229 mm	8,7	25,4	7-Ton, Long 2-Jaw; 2,3 kg
	1038	222	279	11/16–18 x 229 mm	8,7	25,4	7-Ton, Long 2/3-Jaw; 3,3 kg
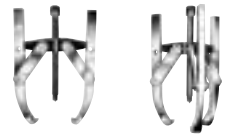 1039/1040 1041/1042	**1039**	279	318	13/16–16 x 305 mm	14,3	25,4	13-Ton, 2-Jaw; 4,8 kg
	1040	387	279	13/16–16 x 305 mm	14,3	25,4	13-Ton, Long 2-Jaw; 5,9 kg
	1041	279	356	13/16–16 x 305 mm	14,3	25,4	13-Ton, 2/3-Jaw; 6,7 kg
	1042	387	432	13/16–16 x 305 mm	14,3	25,4	13-Ton, Long 2/3-Jaw; 8,3 kg
 1043/1044 1045/1046	**1043**	368	356	1–14 x 343 mm	20,6	32,5	17 1/2-Ton, Long 2-Jaw; 8,3 kg
	1044	476	406	1–14 x 343 mm	20,6	32,5	17 1/2-Ton, Long 2-Jaw; 11,8 kg
	1045	386	356	1–14 x 343 mm	20,6	32,5	17 1/2-Ton, 3-Jaw; 15 kg
	1046	476	406	1–14 x 343 mm	20,6	32,5	17 1/2-Ton, Long 3-Jaw; 16,8 kg
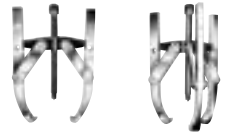 1048 1050	**1048**	565	508	1 1/4–12 x 422 mm	27	38,1	25-Ton, Long 2-Jaw; 19,4 kg
	1050	565	508	1 1/4–12 x 422 mm	27	38,1	25-Ton, Long 3-Jaw; 27,2 kg

For puller piece part identification, order Power Team parts catalog PC97

Mechanical
PUSH PULLERS

10, 17½, & 30 Ton Cap.

For removing and installing gears, bearings, pulleys and other press-fitted parts.

BEARING MAINTENANCE

Fed. Spec.: GGG-P-00781-D

- Can apply a pushing or pulling force, depending on how the puller is set up.
- Optional leg kits adapt your Push-Puller® to extra long or extra short reach.
- A wide variety of threaded adapters, bearing pulling attachments and internal pulling attachments can be used in combination with our Push-Pullers.®

Selection and capacity rating – Each Push-Puller's specified tonnage "capacity" is determined using its standard legs in tension. Using longer legs, or a setup in which the legs are in compression, will reduce the "capacity". Always select the largest "capacity" puller and the shortest legs that will fit the job.

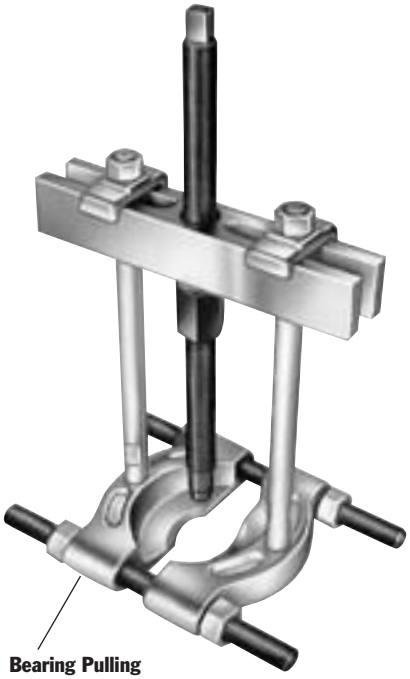

ASSEMBLING THE TOOL TO APPLY PUSHING OR PULLING FORCE:

1. Determine if you want the tool's forcing screw to push or pull.
2. To exert pushing force, the forcing nut is installed beneath the cross block, as shown on left.
3. To cause the forcing screw to pull, the forcing nut is placed on top of the cross block.
4. The sliding plates must always be placed on the opposite side of the cross block from the forcing nut.

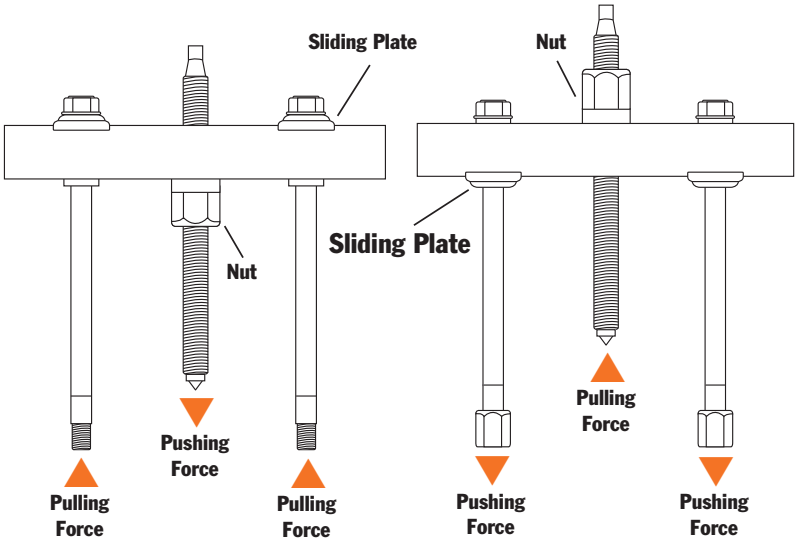

Available Adapters (page 214-215)


Male/Female


Step Plate


Shaft Protector


Female

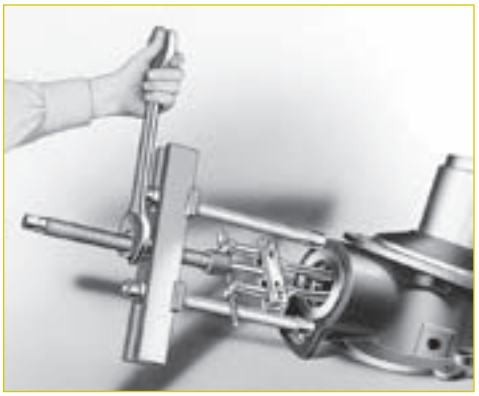

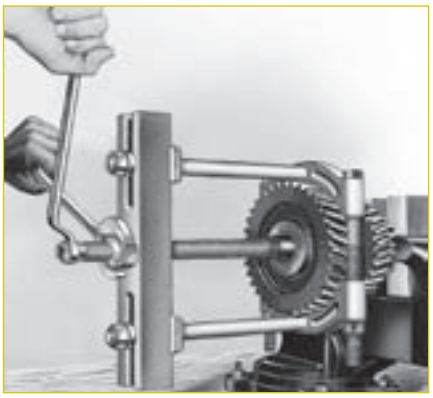

POWER TEAM®

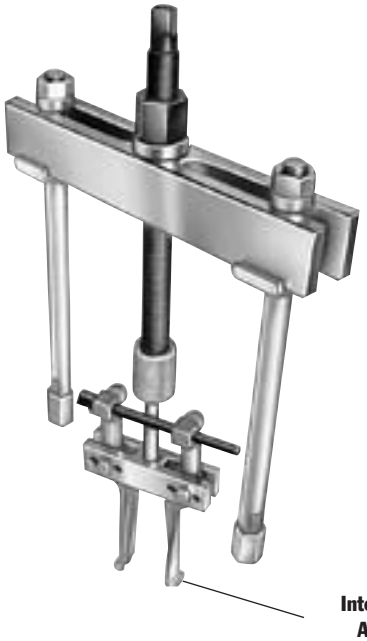

Internal Pulling Attachment

No. 927 – **10-Ton Capacity** can be used with No. 1123 bearing pulling attachment or No. 679 pulley pulling attachment. May also be used with Nos. 1150, 1151, 1152, or 1153 internal pulling attachments.

No. 938 – **17½-Ton Capacity** can be used with Nos. 1124 and 1130 bearing pulling attachments or Nos. 679 and 680 pulley pulling attachments. May also be used with Nos. 1150, 1151, 1153, 1165, or 1166 internal pulling attachments.

No. 939 – **30-Ton Capacity** can be used with Nos. 1126 and 1127 bearing pulling attachments or No. 680 pulley pulling attachment (two 8012 adapters are required to connect 680 to puller). Can be used with No. 1165 internal pulling attachment.

927

Max. Reach	Spread	Screw	Size	Notes / Weight
210 mm	54 - 184 mm	¾"–16 x 305 mm	½" of forcing screw tip end is threaded ⅝"–18. No. 1100 legs and No. 24827 leg ends included. Wt., 3,2 kg.	

Order No.	Leg Length & Wt.	Order No.	Leg Length & Wt.
1103	121 mm, 0,45 kg	1102	298 mm, 1 kg
1100	171 mm, 0,7 kg	1101	400 mm, 1,5 kg

Extra Legs (pair) for No. 927 Push-Puller (Reach equals leg length plus 50,8 mm with leg end caps.)

938

Max. Reach	Spread	Screw	Size	Notes / Weight
282 mm	79–298 mm	1"–14 x 336 mm	Leg ends threaded ⅝"–18. No. 1106 legs and No. 24827 leg ends included. Wt., 9,4 kg	

Order No.	Leg Length & Wt.	Order No.	Leg Length & Wt.
1107	114 mm 1,1 kg	1105	572 mm 4,1 kg
1106	241 mm 2 kg.	1108	762 mm 5,2 kg
1104	419 mm 3 kg		

Extra Legs (pair) for No. 938 Push-Puller (Reach equals leg length plus 50,8 mm with leg end caps.)

939

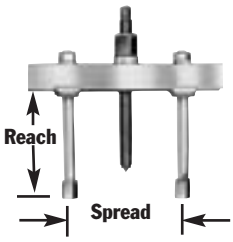

Max. Reach	Spread	Screw	Size	Notes / Weight
267 mm	178–413 mm	1½"–12 x 438 mm	Leg ends threaded 1"–14. No. 1109 legs and No. 28390 leg ends included. Wt., 20 kg	

Order No.	Leg Length & Wt.	Order No.	Leg Length & Wt.
1109	203 mm 3,6 kg	1111	711 mm 10 kg
1110	457 mm 6,8 kg		

Extra Legs (pair) for No. 939 Push-Puller (Reach equals leg length plus 66,7 mm with leg end caps.)

Pulling
ATTACHMENTS

38,1 - 228 mm Jaw Spreads

Recommended for the removal of bearings, bearing cups, bushings and oil seals.

- Handles internal pulling jobs, such as, bearing/bearing cup removal, bushing removal, oil seals, etc.
- Remove hard to get at parts easily and without damage!
- Use with corresponding Power Team Slide Hammer or Push-Puller.®
- Adjustable jaws fit various diameters

Fed. Spec.: GGG-P-00781-D

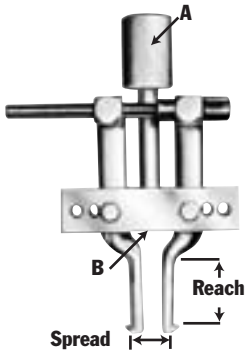

⚠ **CAUTION –** These attachments may not withstand the full tonnage of the pullers they are used with. The shape and condition of the part being pulled affects the tonnage at which the jaws may slip off. Always select the largest attachment which will fit behind the part being pulled. Refer to page 203.

Order No.	Jaw Spread (mm)	Jaw Reach (mm)	A (in. – thd.)	B (in. – thd.)	Wt. (kg)	Application
1153	38,1–127	54	1–14	5/8–18	1,9	Use with Nos. 927 and 938 Push-Pullers,
1150	38,1–152	102	1–14	5/8–18	2	
1151	38,1–178	133	1–14	5/8–18	2	
1152	38,1–152	102	–	5/8–18	1,6	Use with Nos. 927 and 938 Push-Pullers, 1155 and 1156 slide hammer pullers, or 24832 and 24833 puller screw.
1154	38,1–152	102	1–8	5/8–18	2	Use with No. PPH17.
1165	76,7–229	149	1 1/2–12	1–14	6,1	Use with No. 939 Push-Puller.
1166	76,2–229	149	1 1/4–7	1–14	6,1	Use with No. PPH30.
	Puller Screws					
24832	349 mm long		5/8–18	0,5		Use with Nos. 1150, 1151, 1152, and 1153. Acts as a regular forcing screw when threaded directly into block of pulling attachment.
24833	140 mm long		5/8–18	0,2		Use with Nos. 1150, 1152, and 1153. Acts as a regular forcing screw when threaded directly into block of pulling attachment.

Bearing & Pulley

- "Knife-like" edges fit behind bearings and other hard-to-grip parts for easy removal, even where clearance is limited.
- Usable with both Grip-O-Matic® jaw type pullers and Push-Pullers®.
- All puller blocks are made from forged alloy steel

Fed. Spec.: GGG-P-00781-D

Used where space does not permit hooking puller jaws directly on part to be pulled.

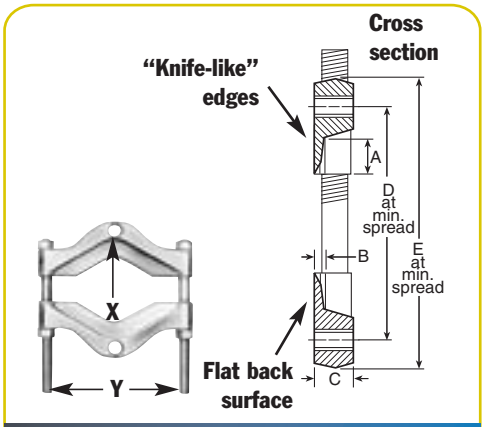

Attachment clamps down into V-groove to distribute load. Use with Grip-O-Matic® pullers or Push-Pullers.

X = Thread of tapped hole in adapter.
Y = Distance between adjusting screws.

Order No.	Max. Spread (mm)	X (in.)	Y (mm)	A (mm)	B (mm)	C (mm)	D (mm)	E (mm)	Wt. (kg)	Application - (Use with Puller Nos.)
1121	6,4-22,2	5/16–18	43	11,1	3,2	12,7	34,9	50,8	0,3	1020, 1022, and 1023.
1122	3,2-51	3/8–16	62	11,1	4,0	15,9	50,8	69,9	0,6	1024, 1025, 1026, 1027, 7392 and 7393.
1123	9,5-117	5/8–18	111	22,2	9,5	25,4	88,9	114,3	2.3	1035, 1036, 1037, 1038, and 927.
1124	12,7-133	5/8–18	152	34,9	11,1	31,8	127	158,8	5,4	1039, 1040, 1041, 1042, PH172, PPH17, and 938.
1126	16-203	1–14	181	34,9	17,5	34,9	146,1	190,5	9	1047, 1043, and 939.
1127	19-340	1–14	260	44,5	17,5	44,5	158,8	215,9	18,8	1047, 1073, and 939.
1128	127-327	1 3/4–12	330	44,5	19,1	57,2	327	406	45,4	PH553C and PPH50. (When using 1128 with PPH50, two 8024 adapters are required to connect PPH50 to the puller tees.)
1129	152-425	1 3/4–12	425	47,6	26,2	69,9	400,1	495,3	89,5	1079 and 1077. (see No.8024 adapter to connect legs of 1077 to puller tees of 1129).
1130	12,7-219	5/8–18	152	34,9	11,1	31,8	127	158,8	5,4	1039, 1040, 1041, 1042, PH172, PPH17, and 938.
		V-belt pulley pulling attachments								
679	45-149	5/8–18	152						2	1035, 1036, 1037, 1038, and 927.
680	42,3-254	5/8–18	257						10,1	1039, 1040, 1041, 1042, 1047, PH172, PPH30* and 938. (When using 680 with PPH30, two 8012 adapters are required.)

Pulling attachment accessory – "Knife-like" edges of attachment fit behind bearings or other parts for easy removal with "Enforcer 55", even if space does not permit hooking puller jaws directly to part being pulled.
No. 1128 – Spread: 127 to 327 mm. Wt., 45,5 kg.

1128-1129

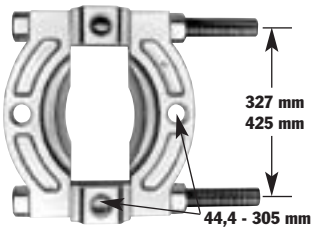

⚠ **CAUTION:** Please refer to page 203.

Pullers
SLIDE HAMMER

Set No. 981

Blind hole puller set – Removal of bearings, bushings, sleeves and other friction-fitted parts from blind holes can now be accomplished with ease. Set provides selection of expanding collets 8 to 44,5 mm I.D. Collet is placed through bore of part to be removed, then expanded with actuator pin so that lips of collet secure a positive grip for pulling. Pulling force is exerted by means of a forcing screw and bridge assembly or with a slide hammer.

No. 981 – Blind-hole puller set with slide hammer, forcing screw, bridge, actuator pins, collets, and storage box. Wt., 9,5 kg.

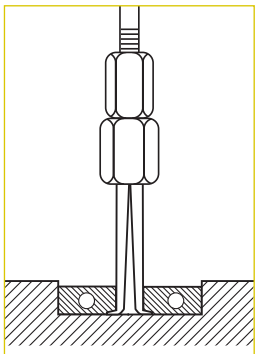

blind hole puller example

Order No.	Description	Order No.	Description
24835	Forcing Screw	28253	Actuator Pin (5 mm dia.)
24836	Forcing Screw Nut	28256	Actuator Pin (12,7 mm dia.)
22185	Hammer 1,1 kg.	41331	Bridge
208627	Shank & Tee Bar Assembly	28323GY8	Metal Box
28250	Actuator Pin (3,2 mm dia.)	10419	Metal Box

Order No.	Inch Range	MM Range	Order No.	Inc Range	MM Range
33856*	5/16" to 3/8"	8 to 9.5	33861**	3/4" to 7/8"	19.1 to 22.2
33857*	3/8" to 7/16"	9.5 to 11.1	33862**	7/8" to 1"	22.2 to 25.4
33858**	7/16" to 1/2"	11.1 to 12.7	33863***	1" to 1 1/4"	25.4 to 31.7
33859**	1/2" to 5/8"	12.7 to 15.9	33864**	1 1/4" to 1 1/2"	31.7 to 38.1
33860**	5/8" to 3/4"	15.9 to 19.1	33865***	1 1/2" to 1 3/4	38.1 to 44.4

*Use with 3 mm actuator pin. **Use with 4,8 mm actuator pin. ***Use with 12,7 mm actuator pin

Slide hammer puller set – This very handy set is ideal for those close-quarter, inside pulling jobs. Very practical for pulling motor, generator, and magneto bearings. Also good for removing small-bore bushings, bearings, and oil seals.

No. SS2 – Slide hammer puller set. Wt., 2,6 kg.

Jaw Set	Inside Spread Min. (mm)	Inside Spread Max. (mm)
1172	12,7	50,8
1174	12,7	34,9

Slide hammer puller set – This useful set contains a reversible-jaw slide hammer puller with a 1,1 kg sliding hammer plus an assortment of special jaws (3 of each size) and adapters. In this set, you get all the versatility you demand of a slide hammer puller.

No. 1178 – Slide hammer puller set with 1,1 kg. sliding hammer. Wt., 6,3 kg.

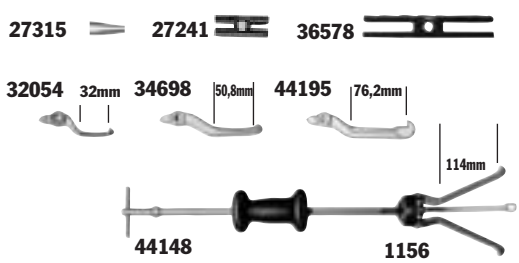

Jaw Set	2-Jaw Spread Inside Min. (mm)	2-Jaw Spread Inside Max. (mm)	2-Jaw Spread Outside Min. (mm)	2-Jaw Spread Outside Max. (mm)	3-Jaw Spread Inside Min. (mm)	3-Jaw Spread Inside Max. (mm)	3-Jaw Spread Outside Min. (mm)	3-Jaw Spread Outside Max. (mm)
44195	38,1	114,3	19,1	127	38,1	120,7	25,4	114
32054	19,1	60.3	—	—	25,4	69.9	—	—
44148	69,9	139.7	19,1	191	82,6	158,8	25,4	159
34698	31,8	88,9	25,4	114	38,1	108	38,1	114

Sliding hammers only -

No. 22185 – 1,1 kg sliding hammer.

No. 34331 – 2,3 kg sliding hammer.

22185

34331

POWER TEAM

Bearing cup remover – The 7136 is perfect for pulling internal bearing cups, seals, bushings, etc. Jaw spread – 23,8 to 82,6 mm, reach to 88,9 mm. Use with any slide hammer having 5/8"-18 thread (Power Team 1155, 1156 or 927 Push-Puller®).

No. 7136 – Universal bearing cup remover. Wt., 0,7 kg.

Pilot bearing pullers -These very versatile pullers are built especially for inside pulling jobs, and particularly for removing flywheel pilot bearings on machines and construction vehicles. Also very practical for pulling motor, generator and magneto bearings.

Special slide hammer puller – Ideal for pulling jobs in very close quarters, as in removal of small-bore bushings, bearings, oil seals, etc. Internal pulling attachment has jaw spread of 12,7 to 35 mm. Handle end has a 1/2"– 20 thread.

Order No.	Reach (mm)	I.D. Spread Min. (mm)	I.D. Spread Max. (mm)	Wt. (kg)
1170	19,1	12,7	38,1	2,2
1171	25,4	22,2	54	2,2
1172	44,5	12,7	50,8	2,2

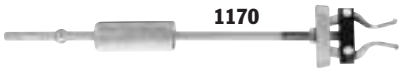

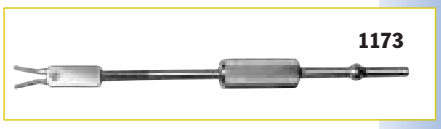

No. 1173 – Slide hammer puller. Wt., 1,6 kg.

No. 1174 – Puller head, less slide hammer.

Basic slide hammer units – Compatible with internal pulling attachment (see page 198). Compatible with threaded adapters (see page 204-205). 610 mm length, 5/8"–18 threaded end.

No. 1155 – Basic slide hammer unit with 2,3 kg hammer. Wt., 3,3 kg.

No. 1156 – Basic slide hammer unit with 1,1 kg hammer. Wt., 2,2 kg.

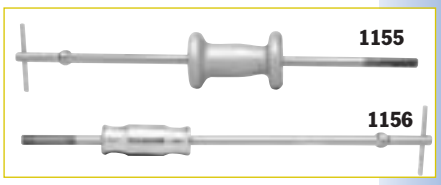

Reversible-jaw slide hammer pullers – Ideal for pulling gears, bearings, outer races, grease retainers, oil seals, etc. Two or three jaws may be used and positioned for "inside" or "outside" pulling jobs. Both have 5/8"– 18 threaded end so attachments and adapters may be used.

No. 1176 – Slide hammer puller with 1,1 kg hammer, 27241 two-way head and 34698 jaws. Wt., 3,3 kg

No. 1177 – Same as 1176 but with 2,2 kg hammer. Wt., 4,8 kg

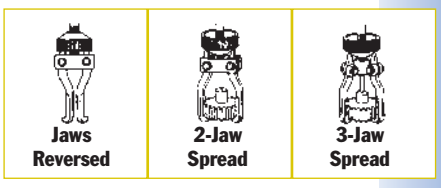

Order No.	2 Jaw Spread Inside Min. (mm)	2 Jaw Spread Inside Max. (mm)	2 Jaw Spread Outside Min. (mm)	2 Jaw Spread Outside Max. (mm)	3 Jaw Spread Inside Min. (mm)	3 Jaw Spread Inside Max. (mm)	3 Jaw Spread Outside Min. (mm)	3 Jaw Spread Outside Max. (mm)	Prod. Wt. (kg)	Overall Length (mm)
1176	31,8	88,9	25,4	114	38,1	108	38,1	114	3,6	686
1177	31,8	88,9	25,4	114	38,1	108	38,1	114	4,8	686

Slide hammer pullers with cup pulling attachments – These combine a basic slide hammer with No. 1152 internal pulling attachment for removing oil seals, outer races, and bearing cups from blind holes.

No. 1157 – Slide hammer puller consisting of 1156 slide hammer and 1152 internal pulling attachment.

No. 1158 – Same as 1157 but with 1155 slide hammer.

Order No.	Reach Max. (mm)	Spread Min. (mm)	Spread Max. (mm)	Prod. Wt. (kg)	Overall Length (mm)
1157	102	38,1	152	4,5	711
1158	102	38,1	152	5,6	711

Puller Sets

Convenient, portable puller sets that go where you do.

10 ton capacity Push-Puller® set – Contains three popular Power Team bar-type pullers in one versatile set, packed in a handy plastic storage case. Tools included permit damage-free pulling of gears, bearings, harmonic balancers, and other parts having tapped holes. Ideal for servicing off-road construction equipment and machinery.

Multi-purpose puller set – This new assortment of pulling tools gives you a wide range of job versatility. You get a 2,2 kg slide hammer puller, hub puller, two sizes of Power Team Grip-O-Matic® jaw-type pullers, a bearing pulling attachment plus a cross-bar gear and pulley puller, all contained in a handy plastic storage case.

Lock-on, jaw-type puller set – Components can be assembled to create several versatile puller versions. The puller head is turned to securely lock the jaws onto the part being removed. Both a 2-way and 3-way puller head are included, plus three long-reach and three short-reach puller jaws in a plastic storage box. Easily removes gears, bearings and other press-fitted parts.

Order No.		Set Contents	Description
1180	10 ton Push-Puller® set, in plastic storage case. Wt., 11,4 kg.	927	10 Ton Push-Puller®; 213 mm reach, 54 to 184 mm spread. Comes with 171 mm puller legs, other leg sizes are available separately (See page 197).
		522	Gear and pulley puller; spread range when used with 12,7 mm cap screws: 50,8 to 197 mm. Cap screws not included.
		7393	Gear and pulley puller with standard 140 mm forcing screw, plus special 330 mm forcing screw. Includes two hex head cap screws, 3/8 "-16 x 76,2 mm long. Spread range: 38 to 180 mm.
1181	Multi-purpose puller set. Wt., 11,4 kg	1177	Slide hammer puller with 2,2 kg hammer, 2-way and 3-way heads. Reversible: either two or three jaws may be used to handle both "inside" and "outside" pulling jobs.
		7208	Hub puller. Includes a spare locknut which permits use with No. 1177 slide hammer.
		1023	2 ton combination 2- or 3-jaw Grip-O-Matic® puller. Has 86 mm max. reach, 121 mm max. spread.
		1027	5 ton combination 2- or 3-jaw Grip-O-Matic® puller. Has 140 mm max. reach, 178 mm max. spread.
		7393	Bar-type gear and pulley puller with 140 mm long screw. Includes two hex head cap screws, 3/8"-16 x 76 mm long. Spread range: 38 to 108 mm.
		1122	Bearing pulling attachment for use with No. 1027 and No. 7393 pullers. Has 50,8 mm max. spread, 3 mm min. spread.

1182 Jaw-type puller set. Wt., 3,1 kg

Puller Jaws Order	2-Jaw Inside* Min. (mm)	2-Jaw Inside* Max. (mm)	2-Jaw Outside Min. (mm)	2-Jaw Outside Max. (mm)	3-Jaw Spread Inside* Min. (mm)	3-Jaw Spread Inside* Max. (mm)	3-Jaw Spread Outside Min. (mm)	3-Jaw Spread Outside Max. (mm)
44195	38	114	19	127	38,1	121	25,4	114
44148	70	140	19	191	83	159	25,4	159

* Can be used for internal pulling tasks when used with a slide hammer.

Puller Sets
STRONG BOX

10 Ton Cap
Push-Pullers®, 2/3 Jaw Pullers & Specialty Pullers

Have the puller you need on hand, when you need it, protected from unauthorized users.

IPS10B

10 ton capacity Strong Box puller set – Here's a set of pullers that gives you almost unheard of versatility. This rugged, lockable metal storage cabinet contains pullers, attachments and extra puller jaws good for a variety of applications. Cabinet may be mounted on a wall, stand, or workbench.

IPS10HB

10 ton capacity hydraulic/manual puller set in Strong Box – This lockable metal Strong Box contains both hydraulic and manual pullers, plus attachments. The rugged storage cabinet keeps the tools organized and secure from unauthorized borrowers!

- Have the puller you need on hand, when you need it, protected from unauthorized or casual borrowers.
- Almost unheard of versatility
- Rugged, lockable storage cabinet.
- Wall, stand or workbench mountable.

Order No.	Set Contents	Description
IPS10B Cabinet (654 x 749 x 254 mm) with tool board, adapter board, and tool set. Wt., 44,5 kg.	927	10 ton capacity Push-Puller® with 172 mm legs
	1027	5 ton combination 2/3-jaw puller
	1037	7 ton combination 2/3-jaw puller
	1101	400 mm puller legs (pair)
	1122	Bearing pulling attachment
	1123	Bearing pulling attachment
	1152	Internal pulling attachment
	7393	Gear and pulley puller
	8005, 8006, 8007, 8010	Male/female threaded
	8013, 8015, 8019	Adapters (2 ea.)
	8035, 8037, 8038, 8039, 8040	Female threaded adapters
	8050 thru 8053	Shaft protectors
	8057 thru 8062	Step plate adapters
	43892	Long jaws for 1037 (3)
	212867	Cabinet, tool board and adapter board
IPS10HB Cabinet (654 x749 x 254 mm) with tool board, pullers, and hydraulics. Wt., 44,5 kg.	*PH103C	10 ton combination 2/3-jaw hydraulic puller
	1027	5 ton combination 2/3-jaw puller
	1042	13 ton combination 2/3-jaw puller
	1177	Slide hammer puller
	44148	3 jaws for slide hammer puller (114 mm)
	44195	3 jaws for slide hammer puller (76 mm)
	36578	Slotted cross head for slide hammer puller
	27315	Seal hook for slide hammer puller
	1152	Internal pulling attachment (38 to152 mm spread)
	24832	Forcing screw for 1152
	215315	Cabinet and tool board

* See page 220.

Adapters

Specialty Pullers & Metric

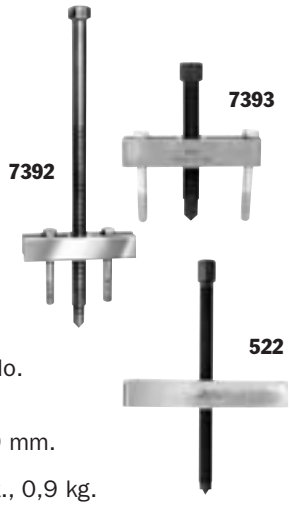

Gear and pulley pullers – Ideal for pulling many small parts having tapped holes. The Nos. 7392 and 7393 may be used with the No. 1122 pulling attachment to remove bearings, etc. Pullers include two hex head cap screws, 3/8" – 16 NC x 76 mm long. Spread: 38 – 108 mm. Width of puller block is 124 mm. Cap screws are not included with the No. 522, but any cap screws up to 12,7 mm diameter may be used. No. 522 spread, when used with 12,7 mm dia. cap screws, is 51–197 mm. Width of the No. 522 puller block is 209 mm.

No. 7392 – Puller with 5/8"-18 x 330 mm long screw. Wt., 0,9 kg.

No. 7393 – Puller with 5/8"-18 x 140 mm long screw. Wt., 0,7 kg

No. 522 – Puller with 3/4"-16 x 295 mm long screw. Wt., 2 kg

4-in-1 puller set – You can quickly assemble a 2- or 3-jaw puller with standard or long reach jaws.

No. PA7 – Four-In-One puller set, 7 ton capacity. Standard jaw max. reach is 127 mm. Maximum spread is 267 mm. Long jaw maximum reach is 222 mm. Maximum spread is 279 mm., 4,9 kg

Flange type puller – Slotted holes in puller body permit cap screws to be positioned to handle bolt-circle diameters from 38 –117 mm.

No. 518 – Flange type puller. Includes 3 cap screws, 3/8" – 24 NF x 76 mm long and 3 cap screws 3/8" – 16 NC x 76 mm long. Forcing screw is 5/8"-18 x 127 mm long Wt., 1,5 kg.

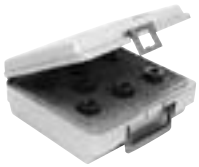

Metric adapters – Add metric capability to your Push-Puller® legs or forcing screws! Four separate metric kits available with a variety of sizes for your Push-Puller® legs or forcing screws! Each packaged in a convenient plastic organizer case.

Order No.	Kit Contents	Female End	Male End	Length (mm)	Order No.	Kit Contents	Female End	Male End	Length (mm)
No. 8110	8111	5/8"-18	M6 x 1.0	57,2	**No. 8120**	8121	5/8"-18	M14 x 1.5	57
Male Metric	8112	5/8"-18	M8 x 1.0	57,2	Male Metric	8122	5/8"-18	M14 x 2.0	57
Wt., 1,4 kg	8113	5/8"-18	M8 x 1.25	57,2	Wt., 1,3 kg	8123	5/8"-18	M16 x 1.5	70
	8114	5/8"-18	M10 x 1.25	57,2		8124	5/8"-18	M16 x 2.0	70
	8115	5/8"-18	M10 x 1.50	57,2		8125	5/8"-18	M20 x 1.5	70
	8116	5/8"-18	M12 x 1.25	57,2		8126	5/8"-18	M20 x 2.5	70
	8117	5/8"-18	M12 x 1.75	57,2					

Note: The adapters in each of these sets are also available separately.

Female threaded adapters - Use these adapters on the ends of Push-Puller® forcing screws, legs, or slide hammers in the removal and installation of shafts, axles, and housings.
Set No. 8044 – consists of a set of 6 adapters (Nos. 8037-8042)

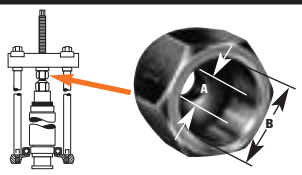

Order No.	Female End "A"	Female End "B"	Order No.	Female End "A"	Female End "B"
8035*	1/2"–20	5/8"–18	8040	5/8"–18	1"–14
8036*	1"–14	1"–14	8041	5/8"–18	1 1/8"–12
8037	5/8"–18	5/8"–18	8042	5/8"–18	1 1/4"–12
8038	5/8"–18	3/4"–16	8043*	5/8"–18	1 1/2"–12
8039	5/8"–18	7/8"–14			

Note: All adapters available separately.

*Not included in set No. 8044. Order separately.

POWER TEAM®

Male-female threaded adapters – These adapters are used on ends of Push-Puller® legs, with forcing screws or slide hammers to assist in pulling shafts, bearing caps, pinions, and many other parts.

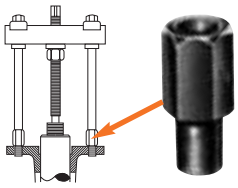

Fed. Spec.: GGG-P-00781-D

Order No.	Female End	Male End	Length (mm)	Order No.	Female End	Male End	Length (mm)
8000	5/8"–18	1/4"–20	57,2	**8015**	5/8"–18	3/4"–10	57,2
8001	5/8"–18	5/16"–18	57,2	**8016**	1"–14	3/4"–10	63,5
8002	5/8"–18	7/16"–14	57,2	**8017**	5/8"–18	7/8"–14	57,2
8003	5/8"–18	7/16"–20	57,2	**8018**	5/8"–18	7/8"–9	57,2
8004	5/8"–18	3/8"–24	57,2	**8019**	5/8"–18	1"–14	57,2
8005	5/8"–18	3/8"–16	57,2	**8020**	1"–8	5/8"–18	76,2
8006	5/8"–18	1/2"–20	57,2	**8021**	1"–8	1"–14	76,2
8007	5/8"–18	1/2"–13	57,2	**8022**	5/8"–18	1/8" pipe	57,2
8008	5/8"–18	9/16"–18	57,2	**8023**	1 1/4"–12	1"–14	114,3
8009	5/8"–18	9/16"–12	57,2	**8024**	1 1/4"–12	1 3/4"–12	114,3
8010	5/8"–18	5/8"–11	57,2	**8025**	1 1/4"–7	5/8"–18	101,6
8011	1"–14	5/16"–11	63,5	**8027**	1 1/4"–7	1"–14	101,6
8012	1"–14	5/8"–18	81	**8028**	1 5/8"–5 1/2	1"–8	101,6
8013	5/8"–18	3/4"–16	57,2	**8029**	1 5/8"–5 1/2	1"–14	101,6
8014	1"–14	3/4"–16	63,5				

Note: Nos. 8000–8029 – each sold individually.

Step plate adapter sets – Power Team step plate adapters are necessary for pulling and installing bearings, gears, or other parts on hollow shafts or housings. Puller screw forces against step plate adapter, as shown at right. May be used with Power Team jaw-type pullers, Push-Pullers® and shop presses.

Set No. 8075 – set of 11 adapters (Nos. 8057-8067).

Set No. 8076 – set of 6 adapters (Nos. 8068-8073).

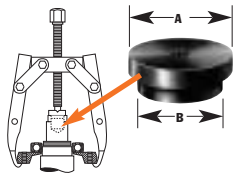

Order No.	Set No. 8075 Dia."A" (mm)	Dia."B" (mm)	Order No.	Set No. 8075 Dia."A" (mm)	Dia."B" (mm)	Order No.	Set No. 8076 Dia."A" (mm)	Dia."B" (mm)
8057	25,4	19,1	**8063**	47,5	38,1	**8068**	66,5	53,8
8058	28,4	22,1	**8064**	50,8	41,1	**8069**	69,9	57,2
8059	31,8	25,4	**8065**	53,8	44,5	**8070**	72,9	60,3
8060	34,8	28,4	**8066**	60,2	47,5	**8071**	76,2	63,5
8061	41,1	31,8	**8067**	63,5	50,8	**8072**	82,6	69,9
8062	44,5	34,8				**8073**	88,9	76,2

Shaft protector set -- Power Team shaft protectors are designed to protect shaft centers from distortion when extreme pressures are applied with jaw-type pullers or Push-Pullers®. Shaft protectors are inserted between the end of the puller screw and the shaft.

Set No. 8056 – Set of 6 shaft protectors (Nos. 8050 thru 8055).

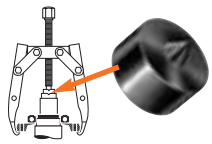

Order No.	"A" (mm)	"B" (mm)	"C" (60°) (mm)	"D" (60°) (mm)	Order No.	"A" (mm)	"B" (mm)	"C" (60°) (mm)	"D" (60°) (mm)
8050	38,1	19,1	9,4	11,1	**8053**	19,1	19,1	6,4	6,4
8051	31,8	19,1	9,4	9,4	**8054**	15,7	15,7	6,4	6,4
8052	25,4	19,1	9,4	7,9	**8055**	15,7	15,7	4,8	4,8

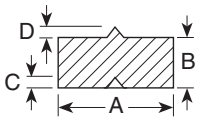

⚠CAUTION: All the items shown may not withstand the full tonnage of the pullers they may be used with. Refer to page 203.

Puller Sets
MANUAL

10 & 17½ Ton

10 ton manual puller set – This puller set is just what you need for removing gears, bearings, etc. Includes pullers, attachments, and many accessories.

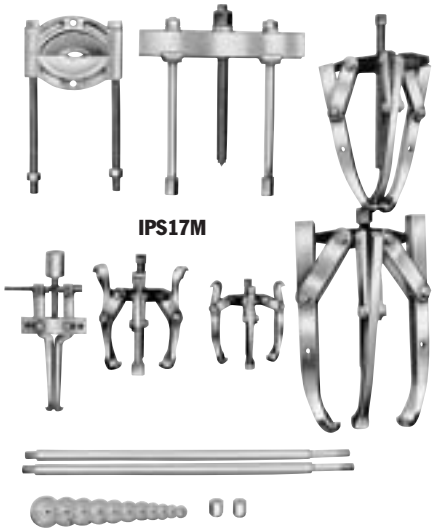

17½ ton manual puller set – The pullers and accessories in this set can be used for hundreds of applications including quick and easy maintenance involving removal and replacement of press-fit parts.

Manual Puller Set No. Order No.	Set Contents	Pullers	Set Contents	Accessories
IPS10M 10 ton capacity Wt., 24 kg.	**927**	10 ton capacity Push-Puller® with 171 mm legs	**8075**	Step plate adapter set
	1023	2 ton combination 2/3-jaw puller	**8044**	Female threaded adapter set
	1026	5 ton combination 2/3-jaw puller	**8035**	Female threaded adapter: ½"–20 x ⅝"–18
	1027	5 ton combination 2/3-jaw puller	**1151**	Bearing cup pulling attachment
	1037	7 ton combination 2/3-jaw puller	**1121**	Bearing pulling attachment
	1178	Slide hammer set	**1122**	Bearing pulling attachment
			1123	Bearing pulling attachment
			1101	400 mm long puller legs for 927 (pr.)
IPS17M 17½ ton capacity Wt., 52,7 kg.	**938**	17½ ton capacity Push-Puller® with 241 mm legs	**8075**	Step plate adapter set
	1027	5 ton combo 2/3-jaw puller, with long jaws	**1105**	572 mm legs for 938
	1037	7 ton combination 2/3-jaw puller	**1130**	Bearing pulling attachment
	1041	13 ton combination 2/3 jaw puller	**1151**	Bearing cup pulling attachment
	1045	17½ ton 3-jaw puller	**8038**	Female adapter: ⅝"–18 F. x ¾"–16 F. (2)

Note: Storing boards must be ordered separately.
No. DB10M – Board for storing IPS10M set. Size 9,5 x 900 x 1200 mm high. Wt., 10,9 kg.
No. DB17M – Board for storing IPS17M set. Size 9,5 x 900 x 1200 mm high. Wt., 11,4 kg.

Protective Blankets and Security Chests

PB1230C

Power Team protective blanket – Our blankets are designed to contain broken or flying parts from the most extreme forces, thus resulting in a much safer work environment.

Testing results – In our lab, this style of blanket held the parts of a necked-down grade 8 bolt, which shattered in a 100 ton center-hole hydraulic cylinder. The blanket sustained no visible damage when shot with a force and impact that shattered safety glasses!

- Effectively contain broken or flying parts from the most extreme pulling, pressing, pushing or stressing forces.
- Ideal for use with pullers and forcing presses.
- Made of see-through, high-tensile, tear resistant material.
- Unlike rigid, fixed guards, these blankets can be wrapped and strapped around a job.
- The clear protective blankets allow you to visually monitor the job from start to finish.
- Protective blankets come in a carrying/storage pouch to reduce aging caused by prolonged exposure to light.

Protect yourself and your equipment.

Order No.	Size (mm)	Number of Straps	Wt. (kg)
PB1230C	305 x 762	2	1,3
PB2036C	508 x 914	2	1,9
PB2860	711 x 1.524	3	4,2
PB3372C	838 x 1.829	3	5,3
PB44120C	1.118 x 3.048	4	10,9
PB51156C	1.295 x 3.962	4	15,5

Note: Custom sizes are available on a special order basis. Please consult factory.

Job-site and maintenance security chests – Protect your valuable tools and equipment from theft and weather. When the day's work is finished, you want to rest assured that your tools and equipment will be present the next day. In these times, security is a real concern. These rugged, lockable chests are the answer that many of our customers have been asking for.

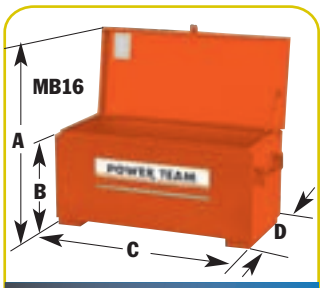

- Rugged, 1,6 mm steel construction with fully arc welded seams for extra strength and weather protection.
- Full length piano hinges, mating cover to body, protect against weather and theft.
- Single or double latch security tabs for padlocks.
- Mechanical cover supports, two 57 mm high skids.
- Fold-down 19 mm pipe handles on each end of chest.
- Pre-drilled for optional casters, which enhance mobility.
- Durable baked enamel finish.

Order No.	Dimensions A (mm)	B (mm)	C (mm)	D (mm)	Cap. (cu. m)	Storage Wt. (kg)	Optional Caster Wheels
MB5	883	356	813	483	0,14	30	**No. 251646–** Set of four 102 mm casters (two swivel and two rigid). Furnished with mounting screws. Wt., 5,7 kg. 
MB8	1.010	483	1.670	483	0,25	40,9	
MB16	1264	610	1.219	610	0,45	57,2	**No. 251647 –** Set of four 152 mm casters (two swivel and two rigid). Furnished with mounting screws. Wt., 7 kg. 

Hydra Grip-O-Matic®
USE WITH 2/3 JAW PULLERS

6, 8, 11 & 30 Ton

A self contained pulling system in a compact package

BEARING MAINTENANCE

NEW


PH303C


PH63C

- You get the world's most copied puller design; the harder the pulling force, the tighter the jaws grip for secure holding force.
- Power Team pullers are tested for top performance and reliability at maximum capacity and jaw spread.
- Removing a wide variety of gears, bearings, bushings, pulleys and other press-fitted parts becomes a routine task.
- Easily metered release valve control knob.
- Spring loaded live centering cone.
- Bladder type oil reservoir.
- Rapid adjustment.
- Use with 2 or 3 jaws.
- Supplied with a sturdy storage/carrying case.
- Features Power Team's exclusive Marathon Limited Lifetime Warranty

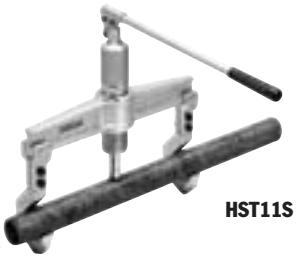
HST11S

Hydra Grip-O-Matic® pulling system - These pullers are ideal for pulling a wide variety of press-fitted parts including bushings, bearings, wheels, gears and pulleys. Applications can be found in a wide variety of industries as well. Grip-O-Matic® pullers have been rigorously tested for top performance and reliability. PH82K is a complete pulling system which includes a hydraulic power module, 2-way puller head, jaws, legs and bearing splitter attachment; all contained in a convenient carrying case.


PH82K

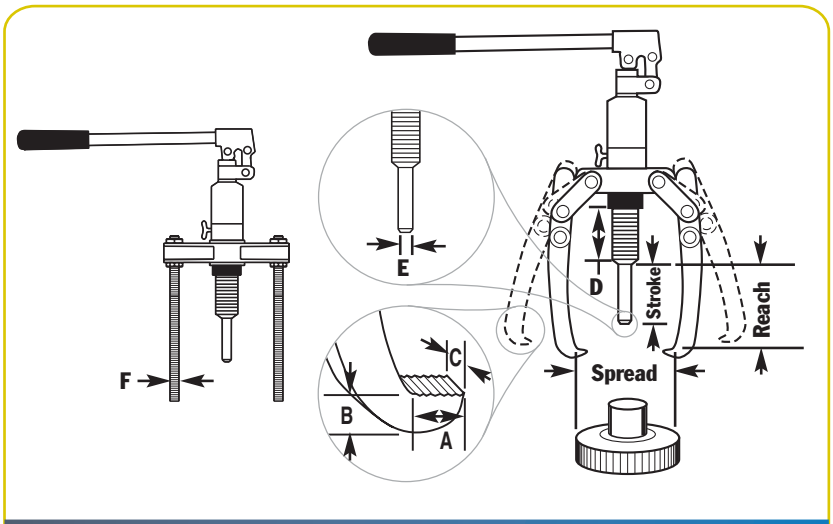

Cyl. Cap. (tons)	Order No.	Reach Studs (mm)	Reach Jaws (mm)	Min. Reach (mm)	Max. Studs (mm)	Spread Jaws (mm)	Stroke (mm)	A (mm)	B (mm)	C (mm)	D (mm)	E (mm)	F (in.)	Wt. (kg)
6	**PH63C**	—	152	—	—	200	80	11	6,4	22	83	22	—	4,9
8	**PH83C**	—	190	—	—	249	80	11	9,5	25,4	83	22	—	6,6
11	**PH113C**	—	229	—	—	280	80	14,3	9,5	29	83	29	—	8,0
30	**PH303C**	266,7	375	—	—	540	110	27	36,5	38	170	54	5/8-18 UNF	32,3
8	**PH82K**	266,7	207	125	300	245	80	52	25,4	16	83	22	5/8-18 UNF	9,5
11	**HST11S**	—	150	—	—	102-410	80	—	—	—	65	29	—	14,5

POWER TEAM

K82

Hydra Grip-O-Matic® puller accessory kits – K82 accessory kit for the Hydra-Grip-O-Matic® puller No. PH83C. Includes 2-way puller head, 2 jaws, 2 threaded legs and sturdy carrying/storage case.
No. K82 – Accessory kit for PH83C Grip-O-Matic® hydraulic puller. K83 2/3 way head accessories kit for a Hydra Grip-O-Matic® puller No. PH83C. Includes 2/3 way puller head, 3 jaws, 3 threaded legs (5/8-18 thread) and sturdy carrying/storage case. Also can be used with 1123, 1124, 1130 pulling attachments.
No. K83 – Accessory kit for PH83C Grip-O-Matic® hydraulic puller.

K83

Puller Accessory converts PH113C into a Hydraulic Straightening Tool – Portable...Good for straightening mechanical shafts, round bars, etc. Simply remove pump and cylinder from puller head and insert them into the straightening tool accessory. This product is widely used in steel mills, wire roll companies, wire extruding companies, textile industry, and any straightening situation where portability and power are required. Contoured heat-treated shaft adapter included.
No. HST11 – Spread: 89 to 410 mm, Reach: 150 mm. Wt., 9,5 kg.

HST11

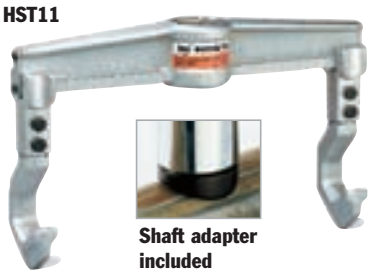

Shaft adapter included

Long jaw set for PH83C and PH113C Grip-O-Matic® pullers – This long jaw set is the perfect addition to the PH83C or PH113C Grip-O-Matic® hydraulic pullers. The extra long jaws give you the added capability of pulling a wider variety of parts. Jaw capacity is 8 tons when used with the PH83C puller; 15 tons when used with the PH113C puller.
No. 1188 – Spread: 280 to 317 mm, Reach: 317 mm.

Pullers
HYDRAULIC

5, 10, 17½, 30 & 50 Ton

- Remove gears, bearings, and other press-fitted parts with speed and ease.
- Broad capacity range of 5, 10, 17½, 30 and 50 tons.
- 5 and 10 ton sets include: single-acting, spring return hydraulic cylinder with hose, coupler and dust cap; single-speed hydraulic hand pump; puller.
- 17½, 30 and 50 tons sets include: Power-Twin® single acting, spring return hydraulic cylinder with hose, coupler and dust cap; single-speed hydraulic hand pump; puller, adjusting screw and crank.
- Hydraulic cylinder of all models is readily removable from puller for use with pump in other hydraulic applications. You get maximum maintenance versatility for your investment.

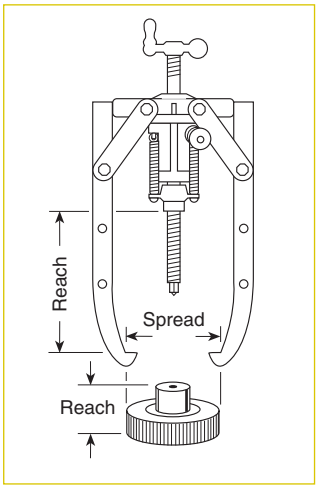

Fed. Spec.: GGG-P-00781-D

5 ton capacity, 2/3 jaw puller –

No. PH53C – Combination 2-jaw/3-jaw puller set. Includes 1057 5 ton puller, RPS55 hydraulic set (C55C cylinder, P12 700 bar hand pump, fittings, coupler, and 1,8 m hose), and 309874 pushing adapter. Wt., 9,1 kg.

No. PH53CR – Combination 2-jaw/3-jaw puller set. Includes 1057 5 ton puller, C55C cylinder, and 309874 pushing adapter. Wt., 5,5 kg

No. 1057 – 5 ton cap. 2-jaw/3-jaw puller only. Wt., 3,5 kg.

Available components -

No. 309874 – 15,9 mm diameter pushing adapter. (Included with PH53C and PH53CR hydraulic puller sets.) Wt., 0,3 kg.

No. 309875 – 22,2 mm diameter pushing adapter. Wt., 0,3 kg.

No. 47997 – 2-way/3-way puller head. (Can be used to convert No. 1038 7 ton manual puller into a 5 ton hydraulic puller.) Wt., 1,1 kg.

10 ton capacity, 2/3 jaw puller -

No. PH103C – Combination 2-jaw/3-jaw puller; 10 ton capacity. Set includes 1060 10 ton puller, RPS1010 cylinder and pump set, 202179 threaded adapter, and 34602 pushing adapter. Wt., 23,6 kg.

No. PH103CR – Combination 2-jaw/3-jaw puller, 10 ton capacity. Set includes 1060 10 ton puller, 202179 threaded adapter, 34602 pushing adapter, and C1010C cylinder only. (Pump and hose not included.) Wt., 14,5 kg.

No. 1060 – Combination 2-jaw/3-jaw puller only; 10 ton capacity. (Cylinder and pump set, hose, coupler, and adapter No. 202179 not included.) Wt., 7,7 kg.

NOTE: This puller may be used with any 10 ton single-acting cylinder having a 2¼"–14 straight collar thread.

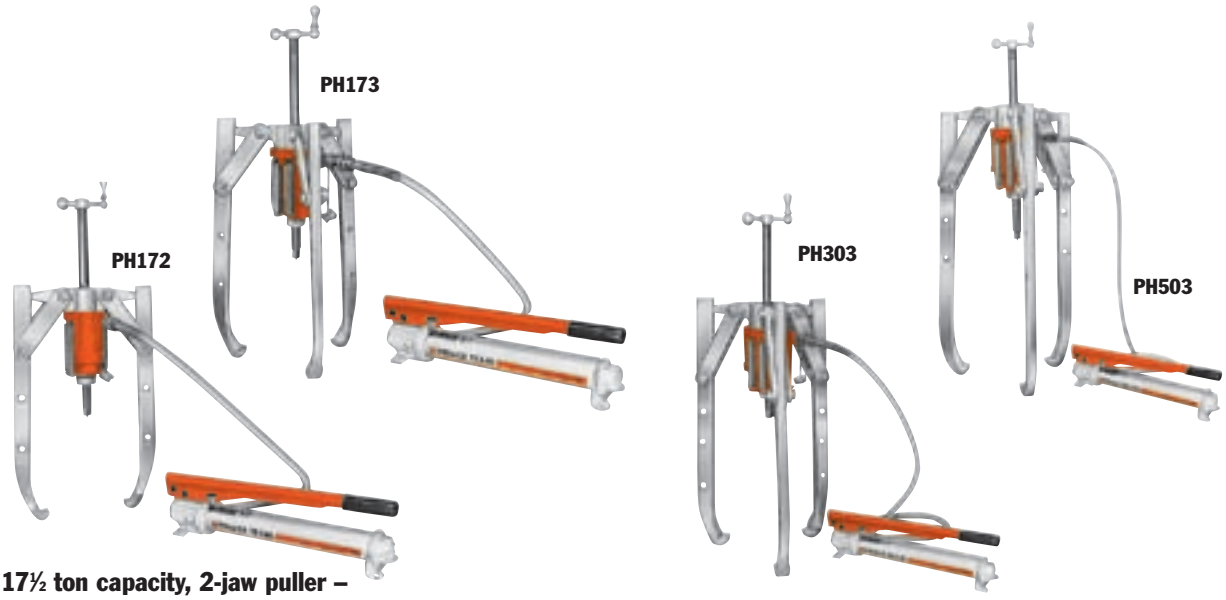

17½ ton capacity, 2-jaw puller –

No. PH172 – 2-jaw puller with RT172 center-hole Power-Twin® cylinder, cylinder half coupler, P55 pump, 1,8 m hose, hose half coupler, 1"– 8 x 508 mm long adjusting screw, and adjusting crank. Wt., 27,7 kg.

No. 1064 – Puller only. (Cylinder, pump, hose, coupler, screw, and crank not included). Wt.,10 kg.

17½ ton capacity, 3-jaw puller –

No. PH173 – 3-jaw puller with RT172 center-hole Power-Twin® cylinder, cylinder half coupler, P55 pump, 1,8 m hose, hose half coupler, 1"– 8 x 508 mm long adjusting screw, and adjusting crank. Wt., 34 kg.

No. PH173R – 3-jaw puller with screw and crank, and RT172 center-hole twin cylinder. Wt.,25,4 kg .

No. 1066 – Puller only. (Cylinder, pump, hose, coupler, screw, and crank not included). Wt., 16,3 kg.

30 ton capacity, 3-jaw puller –

No. PH303 – 3-jaw puller with RT302 center-hole Power-Twin® cylinder, cylinder half coupler, P55 pump, 1,8 m hose, hose half coupler, 1¼"– 7 x 610 mm lg. adjusting screw, and adjusting crank. Wt., 67,7 kg.

No. PH303R – 3-jaw puller with screw and crank, and RT302 center-hole twin cylinder. Wt., 59 kg.

No. 1074 – Puller only. (Cylinder, pump, hose, coupler, screw, and crank not included). Wt., 40,9 kg.

50 ton capacity, 3-jaw puller –

No. PH503 – 3-jaw puller with RT503 center-hole Power-Twin® cylinder, cylinder half coupler, P55 pump, 1,8 m hose, hose half coupler, 1⅝"– 51/2 x 772 mm long adjusting screw, and adjusting crank. Wt., 130 kg.

No. 1080 – 3-jaw puller only. (Cylinder, pump, hose, coupler, screw, and crank not included). Wt., 86,7 kg.

PULLER ONLY

Order No.	Cap. (Tons)	Jaws	Jaw Reach (mm)	Jaw Spread (mm)	Jaw Thickness (mm)	Jaw Width (mm)	Wt. (kg)
1057	5	2/3	222	292	8,7	25	3,5
1060	10	2/3	381	432	14,3	25	7,7
1064	17½	2	292	406	20,6	32,5	10
1066	17½	3	292	508	20,6	32,5	16,3
1074	30	3	494	864	28,6	41,3	40,9
1080	50	3	702	1.118	35,7	47,6	86,7

⚠ **CAUTION:** Always use a 3-jaw puller where clearance permits in order to provide a more stable setup and a more even pulling force.

Push-Pullers®
HYDRAULIC
17½, 30-50 Ton

The power to make impossible jobs become routine.

- Can apply a hydraulic pushing or pulling force, depending on how the puller is set up.
- Each unit includes perfectly matched hydraulic components that can be detached from the Push-Puller® for other tasks requiring dependable Power Team power; assuring maximum return on your investment.
- Optional leg kits adapt your Push-Puller® to extra long or extra short reach.
- A wide variety of threaded adapters, bearing pulling attachments and internal pulling attachments can be used in combination with our Push-Pullers®.

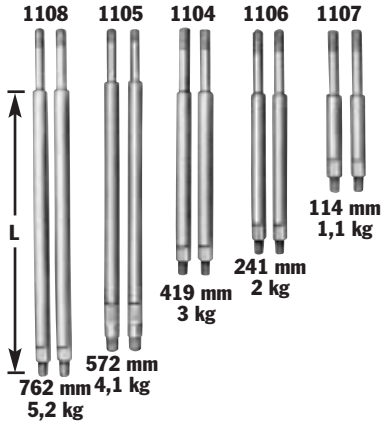

NOTE: L = leg length: 114; 241; 419; 572 and 762 mm subtract 124 mm from leg length to determine reach when using leg end caps.

ASSEMBLING THE TOOL TO APPLY PUSHING OR PULLING FORCE:

1. Determine if you want the tool's forcing screw to push or pull.
2. To exert pushing force, the forcing nut is installed beneath the cross block, as shown on left.
3. To cause the forcing screw to pull, the forcing nut is placed on top of the cross block.
4. The sliding plates must always be placed on the opposite side of the cross block from the forcing nut.

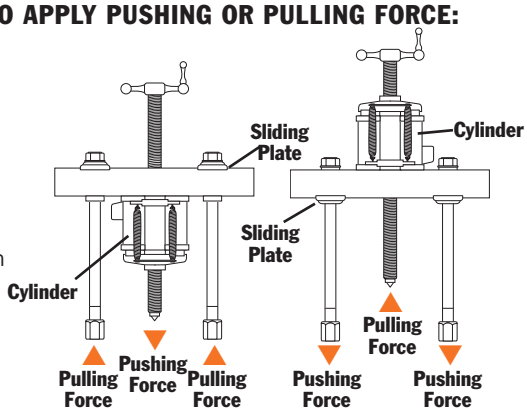

Selection and capacity rating – Each Push-Puller's specified tonnage "capacity" is determined using its standard legs in tension. Using longer legs, or a setup in which the legs are in compression, will reduce the "capacity". Always select the largest "capacity" puller and the shortest legs that will fit the job.

Power Twin® cylinder – This unique center-hole cylinder powers each Push-Puller®. Puller screw runs right between the twin spring cylinder. A basic head allows you to change from a tapped hole to a plain hole by merely changing the head insert.

17½ ton capacity Push-Puller® –

No. PPH17 – Push-Puller® with RT172 center-hole Power Twin® cylinder, cylinder half coupler, P55 pump, 9767 1,8 m. hose, 9798 hose half coupler, 419 mm legs, 24827 leg ends, 1"-8 x 508 mm lg. adjusting screw and adjusting crank. Wt., 26,8 kg.

No. PPH17R – Same as above, but without P55pump, 9767 1,8 m. hose and 9798 hose half coupler. Wt., 18,2 kg.

No. 1062 – Puller only. (Cylinder, pump, hose, coupler, screw and crank not included.) Wt., 9,1 kg.

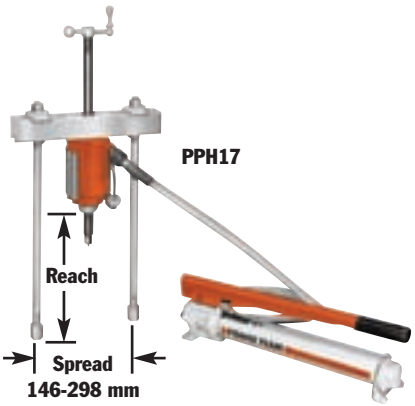

USE WITH:

Bearing pulling attachments: **Nos. 1124 and 1130**.

Pulley pulling attachment: **No. 679**.

Internal pulling attachment: **No. 1154**.

Legs: **Nos. 1104, 1105, 1106, 1107 and 1108 -** Pair of legs for 17½-ton "capacity" Push-Puller®.

Leg Ends – Upper leg ends are threaded ¾"-16. Lower leg ends are threaded ⅝"-18 x 25 mm lg.

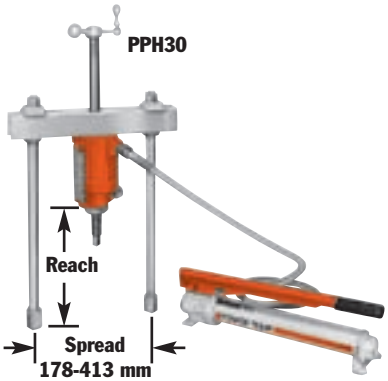

30 ton capacity Push-Puller® -

No. PPH30 – Push-Puller® with RT302 center-hole Power Twin® cylinder, cylinder half coupler, P55 pump, 9767 1,8 m. hose, 9798 hose half coupler, 457 mm legs, 28390 leg ends, 1¼"-7 x 610 mm lg. adjusting screw and adjusting crank. Wt., 46,3 kg.

No. PPH30R – Same as above, but without P55 pump, 9767 1,8 m hose and 9798 hose half coupler. Wt., 37,2 kg.

No. 1070 – Puller only. (Cylinder, pump, hose, coupler, screw and crank not included.) Wt., 19,1 kg.

USE WITH:

Bearing pulling attachments. **No. 680** (Use two 8012 adapters to connect to puller.)

Pulley pulling attachment: **No. 679**.

Internal pulling attachment: **No. 1166**.

Legs: **Nos. 1109, 1110 and 1111 -** Pair of legs for 30 ton "capacity" Push-Puller®.

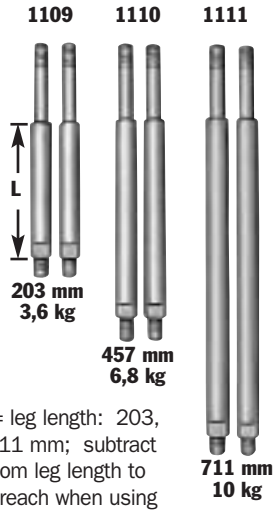

Note: L = leg length: 203, 457 and 711 mm; subtract 149 mm from leg length to determine reach when using leg end caps.

Leg ends are threaded 1"-14 x 32 mm lg.

50 ton capacity Push-Puller® -

No. PPH50 – Push-Puller® with RT503 center-hole Power Twin® cylinder, cylinder half coupler, P55 pump, 9767 1,8 m hose, 9798 hose half coupler, 610 mm legs, 1⅝"-5½ x 722 mm lg. adjusting screw and adjusting crank. Wt., 91,3 kg.

No. PPH50R – Same as above, but without P55 pump, 9767 1,8 m hose and 9798 hose half coupler. Wt., 82,2 kg.

No. 1076 – Puller only. (Cylinder, pump, hose, coupler, screw and crank not included.) Wt., 48,1 kg.

USE WITH:

Bearing pulling attachments: **Nos. 1128 and 1129**.

Legs: **Nos. 1112 and 1113 -** Pair of legs for 50 ton "capacity" Push-Puller®.

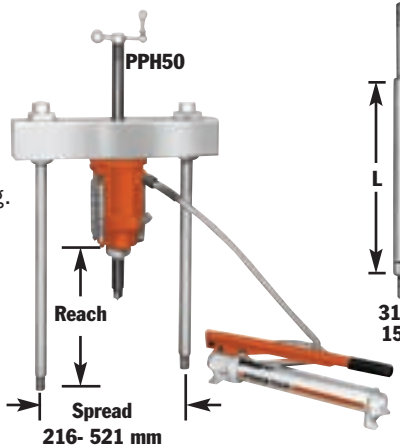

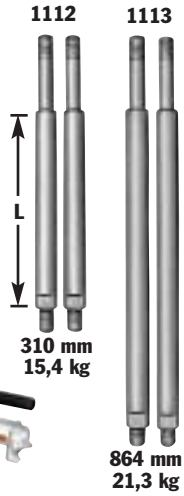

Leg ends are threaded 1¼"-12 x 44,5 mm lg.

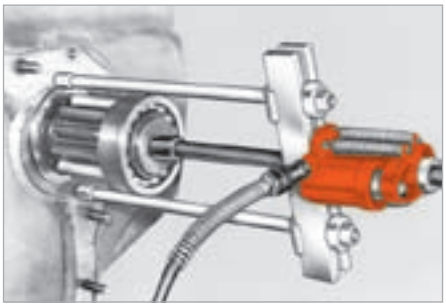

PULLER SELECTION Page 200
ACCESSORIES Page 214

Puller Sets
HYDRAULIC

17½, 30 & 50 Ton

BEARING MAINTENANCE

17½ ton hydraulic master puller sets – Having this Power Team puller set at your fingertips will not only reduce your downtime, but also increase your profits.

No. IPS17 – 17½ ton capacity puller set. Includes hydraulics, pullers, wooden storage box and accessories listed below. Wt., 86,7 kg.

No. IPS17B – Puller set with MB5 metal box. Wt., 96,7 kg.

No. DB17 – Board for storing IPS17 set. Must be ordered separately. Size: 15,9 x 1.200 x 1.800 mm long. Wt., 30,9 kg.

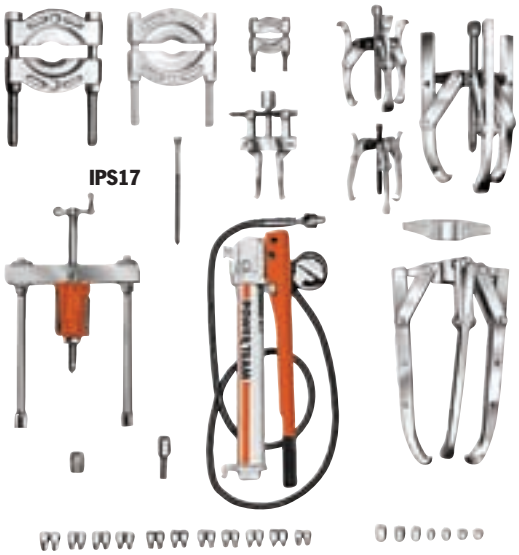

Wooden storage box No. 3084350R9 is included with the sets listed on this page. 914 L x 445 W x 356 mm D Metal storage boxes also available (see page 217).

Contents	Hydraulics
P55	Single-stage hyd. hand Pump assembly
RT172	17½ ton cylinder with threaded insert
9798	Hose half coupler
9767E	Hydraulic hose – 1,8 m
9670	Tee adapter
9059E	Pressure gauge
Pullers	
1062	17½ ton cap. Push-Puller® with 419 mm legs
24814	Speed crank
32118	Adjusting screw
201923	Pushing adapter
1105	572 mm legs (pr)
1066	17½ ton 3-jaw hyd. puller
1027	Combination 2/3-jaw puller
41224	17½ ton 2-jaw puller head
24832	Puller screw
1037	Combination 2/3-jaw puller
1041	Combination 2/3-jaw puller
28228	Cylinder cap

Set Contents	Accessories
1154	Bearing cup pulling attach
1122	Bearing pulling attachment
1123	Bearing pulling attachment
1130	Bearing pulling attachment
Threaded Adapters	
679	V-belt pulley puling attachment
8005	⅝" – 18 F. x ⅜" – 16 M. (2)
8006	⅝" – 18 F. x ½" – 20 M. (2)
8007	⅝" – 18 F. x ½" – 13 M. (2
8010	⅝" – 18 F. x ⅝" – 11 M. (2)
8013	⅝" – 18 F. x ¾" – 16 M. (2)
8015	⅝" – 18 F. x ¾" – 10 M. (2)
8017	⅝" – 18 F. x ⅞" – 14 M. (2)
8018	⅝" – 18 F. x ⅞" – 9 M. (2)
8019	⅝" – 18 F. x 1" – 14 M. (2)
8020	1" – 8 F. x ⅝" – 18 M. (1)
8021	1" – 8 F. x 1" – 14 M. (1)
8044	Female threaded adapter set
8038	⅝" –18 F. x ¾"–16 F. (2)
8056	Set of 6 shaft protectors (8050-8055)
8075	Set of 11 adaptors (8057-8067)

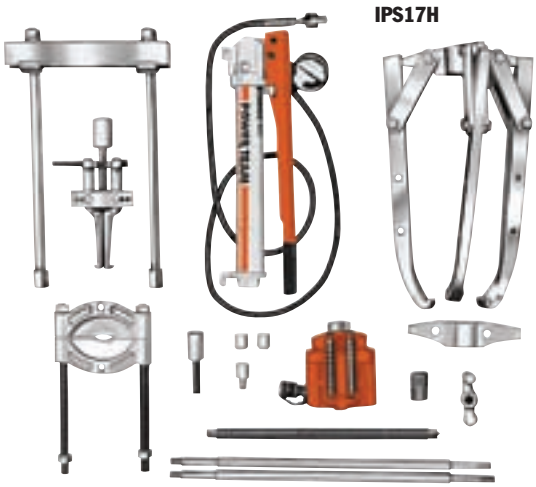

17½ ton hydraulic puller set - This set includes a 3-jaw puller and a Push-Puller®. Ideal for heavy duty applications; put this set to work wherever large gears, bearings, wheels, pulleys, etc. are found.

No. IPS17H – 17½ ton capacity hydraulic puller set. Includes hydraulics, pullers, wooden storage box and accessories listed below. Wt., 62,2 kg.

No. DB17H – Board for storing IPS17H set. Must be ordered separately. Size 15,9 x 1.200 x 1.200 mm Wt., 13,6 kg.

Contents	Hydraulics
P55	Single-stage hydraulic hand pump assembly
RT172	17½ ton cylinder with threaded insert
9798	Hose half coupler
9767E	Hydraulic hose – 1,8 m
9670	Tee adapter
9059E	Pressure gauge
Pullers	
1062	17½ ton cap. Push-Puller with 419 mm legs
1066	17½ ton 3-jaw hyd. puller

Contents	Accessories
1154	Bearing cup pulling attach.
1130	Bearing pulling attachment
1105	572 mm legs (pr)
24814	Speed crank
28228	Screw cap
32118	Adjusting screw
201454	Pushing adapter
41224	2-jaw head for 1066
Threaded Adapters	
8020	1" – 8 F. x ⅝" – 18 M. (1)
8038	⅝" – 8 F. x ¾" – 16 F. (1)

POWER TEAM

30 ton capacity puller set – Just what you need for those big jobs. Not only do you get a 30 ton hydraulic Push-Puller®, you also get a 2-jaw and 3-jaw hydraulic puller. Plus, many popular accessories and the hardware to tackle the big jobs right away.

No. IPS30H – 30 ton capacity hydraulic maintenance puller set. Includes hydraulics, pullers, wooden storage box and accessories listed below. Wt., 150 kg.

No. DB30H – Board for storing IPS30H set. Must be ordered separately. Size 15,9 x 1.200 x 1.800 mm Wt., 35,4 kg.

IPS30H

Contents	Hydraulics	Contents	Pullers
P55	Single-stage hydraulic hand pump assembly	**1074**	30 ton, 3-jaw hyd. puller
RT302	30 ton cylinder with threaded insert	**41226**	2-way head for 1074
9798	Hose half coupler	**1070**	30 ton cap. hydraulic Push-Puller® with 457 mm legs
9767E	Hydraulic hose – 1,8 m	**1111**	711 mm legs for 1070
9670	Tee adapter	**27198**	Speed crank
9059E	Pressure gauge	**28229**	Screw cap
	Accessories	**34510**	Pushing adapter
8036	Female threaded adapters 1" – 14F. x 1" – 14F. (2)	**34758**	Adjusting screw
1166	Bearing cup pulling attach.		
1127	Bearing pulling attachment		

Note: Wooden storage box No. 3084380R9 is provided with the sets listed on this page. 1181L x 572H x 610D Metal storage boxes also available (see page 217).

50 ton capacity puller set - For those really big jobs, this 50 ton puller set is what you need. Just think of the jobs you can do with a 50 ton hydraulic Push-Puller®, a 2-jaw and a 3-jaw puller, both with a 50 ton capacity. Of course, you also get many versatile accessories and attachments.

No. IPS50H – 50 ton capacity hydraulic maintenance puller set. Includes hydraulics, pullers, wooden storage box and accessories listed below. Wt., 261 kg.

IPS50H

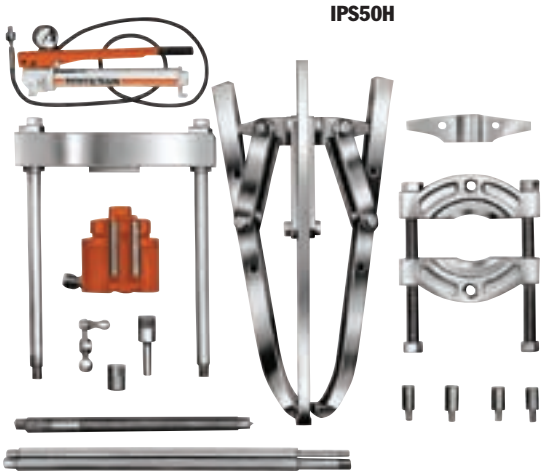

No.	Hydraulics	No.	Pullers
P55	Single-stage hydraulic hand pump assembly	**1080**	50 ton, 3-jaw hyd. puller
RT503	50 ton cylinder with threaded insert	**50449**	2-way head for 1080
9798	Hose half coupler	**1076**	50 ton cap. hydraulic Push-Puller® with 610 mm legs
9767E	Hydraulic hose – 1,8 m	**1113**	864 mm legs for 1076
9670	Tee adapter	**29595**	Speed crank
9059E	Pressure gauge	**28230**	Screw cap
		34755	Pushing adapter
	Threaded Adapters	**32698**	Adjusting screw
8024	$1\frac{1}{4}$" – 12F. x $1\frac{3}{4}$" – 12M. (2)		**Accessories**
8028	$1\frac{5}{8}$" – $5\frac{1}{2}$ F. x 1" – 8M.	**1128**	Bearing pulling attachment
8029	$1\frac{5}{8}$" – $5\frac{1}{2}$ F. x 1" – 14M.		

⚠ **CAUTION:** All the items shown may not withstand the full tonnage specified. Example: When an accessory with a 1 ton capacity is used with a 7 ton puller, the setup can be used only at a force of 1 ton.

Puller Sets
HYDRAULIC

17½ & 30 Ton
17½ & 50 Ton

BEARING MAINTENANCE

IPS3017

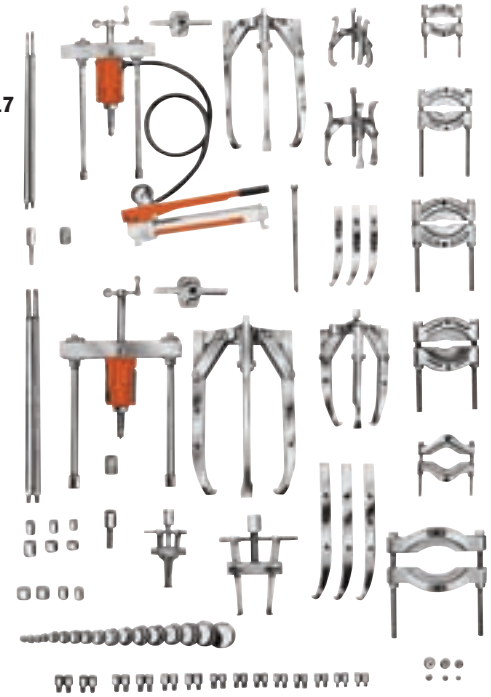

17½ and 30 ton capacity puller sets – These heavy-duty maintenance sets will more than pay for themselves, especially in saving you costly damage to parts. This set lets you tackle hundreds of applications where pushing and pulling are required.

No. IPS3017 – 17½ and 30 ton capacity manual and hydraulic puller set. Includes hydraulics, pullers, and accessories listed below. Wt., 244 kg.

No. IPS3017B – Puller set with MB8 metal box. Wt., 256 kg.

Note: Wooden storage box No. 3084360R9 is provided with this set.
1.016 L x 445 H x 610 mm D
Metal storage boxes also available (see page 217).

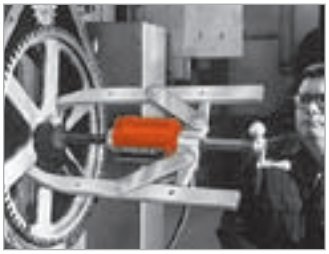

2-jaw puller reaches through spokes of gear to grip hub. Hand pump supplies hydraulic power.

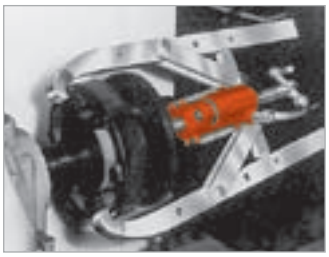

Flexible coupler is removed from electric motor shaft with 2-jaw puller.

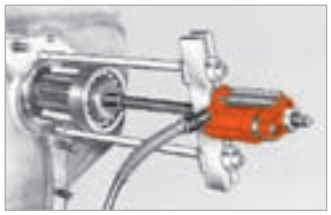

Typical setup for removing sprocket drive pinion shaft. Puller screw is attached to shaft by threaded adapter. Shaft is now ready to be pulled out hydraulically.

No.	Hydraulics
P55	Single-stage hyd. hand pump assembly
RT172	17½ ton center-hole twin cylinder w/ threaded insert
RT302	30 ton center-hole twin cylinder w/ threaded insert
9798	Hose half coupler
9767E	Hydraulic hose – 1,8 m
9670	Tee adapter
9059E	Pressure gauge
	Pullers
1062	17½ ton cap. hydraulic Push-Puller® w/419 mm legs
1070	30 ton cap. hydraulic Push-Puller® w/457 mm legs
1066	17½ ton 3-jaw hyd. puller
1074	30 ton 3-jaw hyd. puller
41224	17½ ton 2-jaw puller head
41226	30 ton 2-jaw puller head
1027	Combination 2/3-jaw puller
1037	Combination 2/3-jaw puller
1041	Combination 2/3-jaw puller
43892	Long jaws (3) for 1037
30902	Long jaws (3) for 1041
1105	572 mm legs for 1062
1111	711 mm legs for 1070
24814	Speed crank
27198	Speed crank
28229	Screw cap
28228	Cylinder cap
32118	Adjusting screw
34758	Adjusting screw
34510	Pushing adapter
201923	Pushing adapter

No.	Accessories
24832	Special puller forcing screw
8075	Step plate adapter set
8076	Step plate adapter set
8056	Shaft protector set
679	Pulley pulling attachment
680	Pulley pulling attachment
1154	Bearing cup pulling attach.
1166	Bearing cup pulling attach.
1122	Bearing pulling attachment
1123	Bearing pulling attachment
1126	Bearing pulling attachment
1130	Bearing pulling attachment
	Threaded Adapters
8005	⅝" – 18 F. x ⅜" – 16 M. (2)
8006	⅝" – 18 F. x ½" – 20 M. (2)
8007	⅝" – 18 F. x ½" – 13 M. (2)
8010	⅝" – 18 F. x ⅝" – 11 M. (2)
8012	1" – 14 F. x ⅝" – 18 M. (2)
8013	⅝" – 18 F. x ¾" – 16 M. (2)
8015	⅝" – 18 F. x ¾" – 10 M. (2)
8017	⅝" – 18 F. x ⅞" – 14 M. (2)
8018	⅝" – 18 F. x ⅞" – 9 M. (2)
8019	⅝" – 18 F. x 1" – 14 M. (2)
8020	1" – 8 F. x ⅝" – 18 M. (1)
8021	1" – 8 F. x 1" – 14 M. (1)
8025	1¼" – 7 F. x ⅝" – 18 M. (2)
8027	1¼" – 7 F. x 1" – 14 M. (2)
8036	1" – 14 F. x 1" – 14 F. (2)
8038	⅝" – 18 F. x ¾" – 16 F. (2)
8044	Female threaded adapter set

⚠ **CAUTION**: All the items shown may not withstand the full tonnage specified. Example: When an accessory with a 1 ton capacity is used with a 7 ton puller, the setup can be used only at a force of 1 ton.

POWER TEAM

17½ and 50 ton capacity puller sets – If your looking for a maintenance puller set that will handle a wide variety of applications, this is the one for you. The mechanical and hydraulic pullers and attachments are designed to handle most removing and installing jobs with a minimal amount of effort.

No. IPS5017 – 17½ and 50 ton capacity manual and hydraulic puller set. Includes hydraulics, pullers, wooden storage box and accessories listed below. Wt., 405 kg.

No. IPS5017B – Puller set with MB16 metal box. Wt., 415 kg.

IPS5017

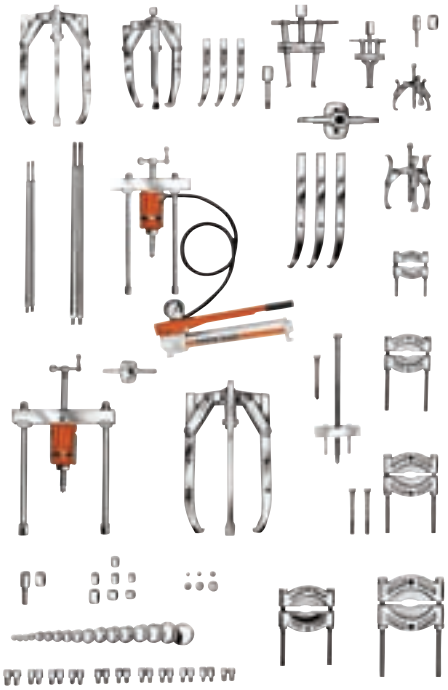

No.	Hydraulics
P55	Single-stage hyd. hand pump assembly
RT172	17½ ton center-hole twin cylinder w/ threaded insert
RT503	50 ton center-hole twin cylinder w/ threaded insert
9798	Hose half coupler
9767E	Hydraulic hose – 1,8 m
9670	Tee adapter
9059E	Pressure gauge
	Pullers
1062	17½ ton cap. hydraulic Push-Puller® w/419 mm legs
1076	50 ton cap. hydraulic Push-Puller® w/610 mm legs
1066	17½ ton 3-jaw hyd. puller
1080	50 ton 3-jaw hyd. puller
41224	17½ ton 2-jaw puller head
50449	50 ton 2-jaw puller head
1027	Combination 2/3-jaw puller
1037	Combination 2/3-jaw puller
1041	Combination 2/3-jaw puller
43892	Long jaws (3) for 1037
30902	Long jaws (3) for 1041
1105	572 mm legs for 1062
1113	864 mm legs for 1076
24814	Speed crank
29595	Speed crank
28228	Screw cap
28230	Cylinder cap
32118	Adjusting screw
32698	Adjusting screw
34755	Pushing adapter
201923	Pushing adapter
7392	Gear and pulley puller
24833	Forcing screw for 7392

No.	Accessories
8075	Step plate adapter set
8076	Step plate adapter set
8056	Shaft protector set
1154	Bearing cup pulling attach.
1166	Bearing cup pulling attach.
1122	Bearing pulling attachment
1123	Bearing pulling attachment
1126	Bearing pulling attachment
1127	Bearing pulling attachment
1130	Bearing pulling attachment
34479	Reducing adapter for 1166
10215	Hex nut; ¾" – 16 (2)
24829	Short bolt
	Threaded Adapters
8005	⅝" – 18 F. x ⅜" – 16 M. (2)
8006	⅝" – 18 F. x ½" – 20 M. (2
8007	⅝" – 18 F. x ½" – 13 M. (2)
8010	⅝" – 18 F. x ⅝" – 11 M. (2)
8013	⅝" – 18 F. x ¾" – 16 M. (2)
8015	⅝" – 18 F. x ¾" – 10 M. (2)
8019	⅝" – 18 F. x 1" – 14 M. (2)
8020	1" – 8 F. x ⅝" – 18 M. (1)
8021	1" – 8 F. x 1" – 14 M. (1)
8023	1¼" – 12 F. x 1" – 14 M. (2)
8028	1⅝" – 5½ F. x 1" – 8 M. (1)
8029	1⅝" – 5½ F. x 1" – 14 M. (1)
8038	⅝" – 18 F. x ¾" – 16 F. (1)
8044	Female threaded adapter set

Note: Wooden storage box No. 3084390R9 is provided with this set.
1181 L x 572 H x 762 mm D
Metal storage boxes also available (see page 217).

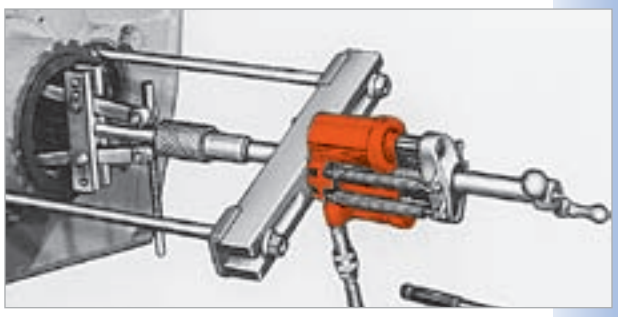

Combination of 50 ton capacity Push-Puller and cup pulling attachment simplifies the removal of a final drive axle seal.

Hydraulically powered Push-Puller removes drive wheel. Pulling attachment is used to provide gripping surface.

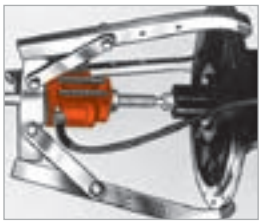

3-jaw puller provides grip while hydraulic hand pump provides power to push shaft from housing. Shaft protector is used on end of puller screw.

⚠ CAUTION: All the items shown may not withstand the full tonnage specified. Example: When an accessory with a 1 ton capacity is used with a 7 ton puller, the setup can be used only at a force of 1 ton.

Puller Sets
HYDRAULIC

17½, 30 & 50 Ton

17½, 30 & 50 ton capacity puller set – Here's the ultimate in industrial puller sets! You'll find a puller for just about every job. Included in this "master set" are 17½, 30 and 50 ton hydraulics, along with an extensive assortment of pullers, attachments and adapters.

No. IPS5317 – 17½, 30 and 50 ton capacity manual and hydraulic puller set. Includes hydraulics, pullers, wooden storage box and accessories listed below. Wt., 572 kg.

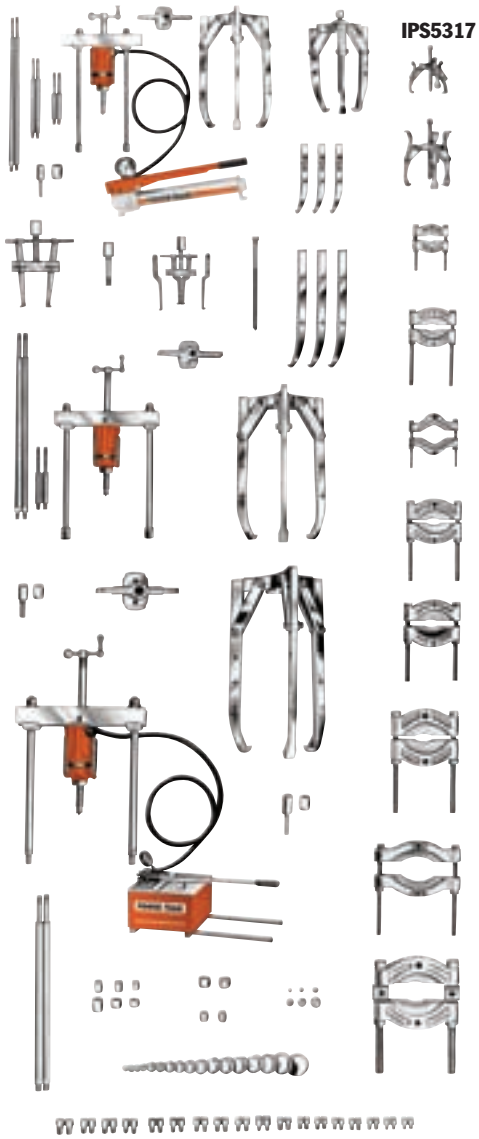

Note: Wooden storage box No. 3084400R9 is provided with this set.
11682 L x 572H x 9140 mm D
Metal storage boxes also available (see page 207).

Contents	Hydraulics
P55	Single-stage hyd. hand pump assembly
P460	Two-stage hyd. hand pump w/ 3-way control valve
RT172	17½ ton center-hole twin cylinder w/ threaded insert
RT302	30 ton center-hole twin cylinder w/ threaded insert
RT503	50 ton center-hole twin cylinder w/ threaded insert
9798	Hose half coupler (2)
9767E	Hydraulic hose – 1,8 m (2)
9670	Tee adapter
9059E	Pressure gauge
	Pullers
1062	17½ ton cap. hydraulic Push-Puller® w/419 mm legs
1070	30 ton cap. hydraulic Push-Puller® w/457 mm legs
1076	50 ton cap. hydraulic Push-Puller® w/610 mm legs
1066	17½ ton 3-jaw hyd. puller
1074	30 ton 3-jaw hyd. puller
1080	50 ton 3-jaw hyd. puller
41224	17½ ton 2-jaw puller head
41226	30 ton 2-jaw puller head
50449	50 ton 2-jaw puller head
1027	Combination 2/3-jaw puller
1037	Combination 2/3-jaw puller
1041	Combination 2/3-jaw puller
43892	Long jaws (3) for 1037
30902	Long jaws (3) for 1041
32136	Long jaws (3) for 1154
1105	572 mm legs for 1062
1106	241 mm legs for 1062
1107	114 mm legs for 1062
1109	203 mm legs for 1070
1111	711 mm legs for 1070
1113	864 mm legs for 1070
	Accessories
24832	Special puller forcing screw
24814	Speed crank
27198	Speed crank
29595	Speed crank
28228	Screw cap
28229	Screw cap

Contents	Accessories
28230	Screw cap
32118	Adjusting screw
32698	Adjusting screw
34758	Adjusting screw
34510	Pushing adapter
34755	Pushing adapter
201923	Pushing adapter
8075	Step plate adapter set
8076	Step plate adapter set
8056	Shaft protector set
679	Pulley pulling attachment
680	Pulley pulling attachment
1154	Bearing cup pulling attach.
1166	Bearing cup pulling attach.
1122	Bearing pulling attachment
1123	Bearing pulling attachment
1126	Bearing pulling attachment
1127	Bearing pulling attachment
1128	Bearing pulling attachment
1130	Bearing pulling attachment
34479	Reducing adapter
	Threaded Adapters
8005	⅝" – 18 F. x ⅜" – 16 M. (2)
8006	⅝" – 18 F. x ½" – 20 M. (2)
8007	⅝" – 18 F. x ½" – 13 M. (2)
8010	⅝" – 18 F. x ⅝" – 11 M. (2)
8012	1" – 14 F. x ⅝" – 18 M. (2)
8013	⅝" – 18 F. x ¾" – 16 M. (2)
8015	⅝" – 18 F. x ¾" – 10 M. (2)
8017	⅝" – 18 F. x ⅞" – 14 M. (2)
8018	⅝" – 18 F. x ⅞" – 9 M. (2)
8019	⅝" – 18 F. x 1" – 14 M. (2)
8020	1" – 8 F. x ⅝" – 18 M. (1)
8021	1" – 8 F. x 1" – 14 M. (1)
8023	1¼" – 12 F. x 1" – 14 M. (2)
8024	1¼"– 12 F. x 1¾"–12 M. (2)
8025	1¼" – 7 F. x ⅝" – 18 M. (2)
8027	1¼" – 7 F. x 1" – 14 M. (2)
8028	1⅝" – 5½ F. x 1" – 8 M. (1)
8029	1⅝"– 5½ F. x 1"– 14 M. (1)
8036	1" – 14 F. x 1" – 14 F. (2)
8038	⅝" – 18 F. x ¾" – 16 F. (2)
8044	Female threaded adapter set

⚠ **CAUTION:** All the items shown may not withstand the full tonnage specified. Example: When an accessory with a 1 ton capacity is used with a 7 ton puller, the setup can be used only at a force of 1 ton.

Bearing
PUSHERS
8 Ton

These pushers are ideal for installing a wide variety of press-fit parts, including bushings, wheels, bearings, gears, and pulleys. Applications for the pushers will be found in motor repair shops, steel mills, mines, quarries, shipyards, utilities, maintenance shops, agricultural machinery repair, and the list goes on.

- Power Team, a leader in hydraulic tools for over 80 years, now adds patented, pushing systems to the world's most complete line of innovative equipment.
- Power Team pushers have been rigorously tested for top performance and reliability at maximum capacity.
- These pushing systems are covered by Power Team's exclusive Lifetime Marathon Warranty — assuring you of the highest quality and reliability.

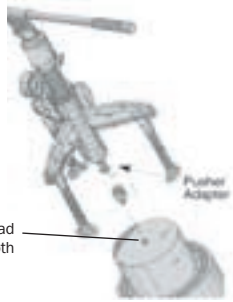

PHP8R

BEARING PUSHER KITS

- Portable pushing kits include an external Grip-O-Matic puller, an internal puller, hydraulic cylinder, and a tri-section pulling attachment, all in one compact, lightweight unit complete with carrying case.

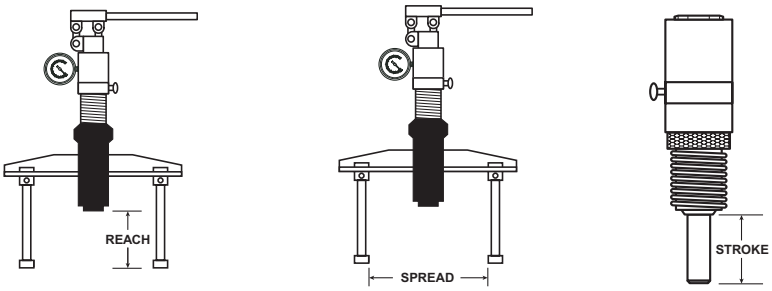

Order No.	Description	Cylinder Capacity	Reach (mm)	Spread (mm)	Stroke	Weight with Case (kg)
PHP8H	Manual-Hydraulic Pusher	8 tons	55-385	58-270	82	33.5
PHP8R	Remote Hydraulic Pusher	8 tons	55-385	58-270	82	33
PHP8H-1	Manual-Hydraulic Pusher/Puller Kit	8 tons	55-385	58-270	82	53
PHP8R-1	Remote Hydraulic Pusher/Puller Kit	8 tons	55-385	58-270	82	52

IMPORTANT SAFETY INFORMATION: Power Team recommends the use of protective blankets for all pushing operations. For ease of visual clarity, we have shown the pusher application photos without these safeguards.

Universal Puller

55 Ton & 100 TON
"Enforcer 55"
& Enforcer 100

BEARING MAINTENANCE

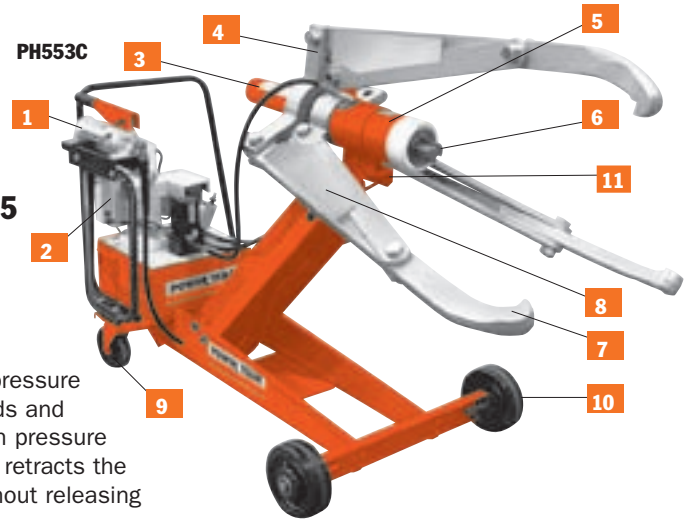

ENFORCER 55

1. Hydraulic lift system for easy, precise position of puller.
2. Unique dual pump arrangement: Low pressure pump positions, holds and opens jaws. The high pressure pump advances and retracts the pushing cylinder without releasing clamped jaws.
3. Hydraulically-actuated jaws. Cylinder moves in or out to provide a safe, secure grip on workpiece.
4. Puller can be assembled in 2 or 3 jaw configurations.
5. Choice of cylinder with a 159 mm or 337 mm stroke.
6. Self-centering: Center cylinder on work; puller jaws will automatically grip work evenly.
7. Super Grip-O-Matic® feature means the harder the pull, the tighter the puller jaws grip. No chains or cages required to keep puller jaws from slipping or springing off the part being pulled.
8. Guards at pinch points protect operator.
9. Cart's swivel casters give ease of mobility.
10. Large wheels make movement of cart easy.
11. Puller can be mounted on cart 90 degrees to right or left of puller cart centerline, permitting use in tight quarters, such as between machinery.

Note: Four cylinder extensions (not pictured) are included. The included lifting eyes (not pictured) permit use of an overhead crane to raise entire assembly.

Conversion kit No. 251468 – Kit converts PH553C series to PH5532CL series. Jaws are 305 mm longer. Kit contains three jaws and six straps with guards. Wt., 114 kg.

Pushing Adapters

Order No.	A (mm)	B (mm)	Qty.*
251002	69,9	69,9	1
350593	69,9	152,4	2
350594	69,9	76,2	1
350637	69,9	254	1

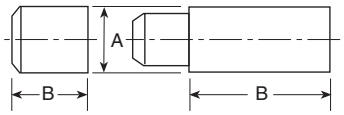

*Number of adapters supplied with each Enforcer.

(251002)

Order No.	Min. Spread (mm)	Reach Min. Spread (mm)	Max. Spread (mm)	Reach Max. Spread (mm)	Overall Length* (mm)	Cyl. Stroke (mm)	Power Source Requirements	Prod. Wt. (kg.)	Puller Jaw Tip Dimensions A (mm)	B (mm)	C (mm)
PH553C-E220	101,6	559	1.219	356	2.286	159	230 V, 50 Hz, 15 Amp Cap.	339			
PH553C13-E220	101,6	381	1.219	178	2.286	337	230 V, 50 Hz, 15 Amp Cap.	352			
PH553CL-E220	63,5	829	1.149	737	2.591	159	230 V, 50 Hz, 15 Amp Cap.	366			
PH553CL13-E220	63,5	651	1.149	559	2.591	337	230 V, 50 Hz, 15 Amp Cap.	379			

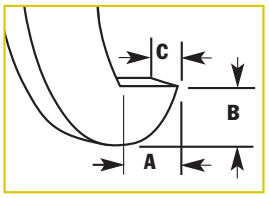

Note: See other pulling attachmnts on page209

Also available in 110 Volt

Note: Cart and Puller (cart width is 813 mm)

POWER TEAM®

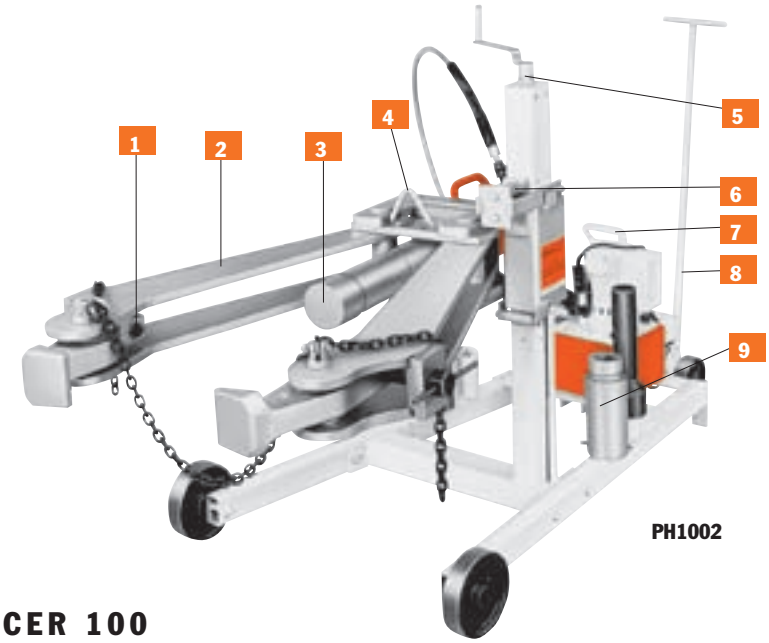

PH1002

An ideal puller for steel mills, mines, oil fields, utility projects, paper mills, construction sites, railroads, airline shops, shipyards or anywhere else where large equipment and machinery pose tough maintenance challenges.

ENFORCER 100

1. Adjustable jaws mean they always pull on a flat surface. Retaining chain holds jaws in place during positioning.
2. Grip-O-Matic® feature means jaws grip progressively tighter as more pulling force is applied.
3. 100 ton hydraulic cylinder is single-acting, spring return type with a maximum working pressure of 700 bar.
4. Lifting bracket allows puller to be lifted if the workpiece center is more than 914 mm off the floor.
5. Adjusting screw allows operator to move vertical position of the puller.
6. Spring loaded feature means Enforcer 100 will align itself on uneven pulls.
7. Hydraulic pump is a 2-stage, high pressure unit controlled by remote hand switch with 7,6 m cord.
8. Tow bar provides puller with plenty of mobility.
9. Pushing adapters have a diameter of 105 and 63,5 mm.

"Enforcer 100" universal puller –
No. PH1002 – 100 ton, 2-jaw universal hydraulic puller. Includes: 2-jaw Grip-O-Matic® puller, PE552S-E220 2-speed electric/hydraulic power unit, C10010C 100 ton hydraulic cylinder with 260 mm stroke and six adapters. Wt., 404 kg.
No. PH1002J – Same as PH1002-E220, but without hydraulic power unit. Wt., 375 kg.
PE552S-E220 – Pump only. 0,84 KW, 220 volt, 50Hz, single phase, draws 13 amps at full load.
Also available in 115 volt, 50/60Hz.

Note: For 115 volt, 50/60Hz applications, order Part No. PH1002

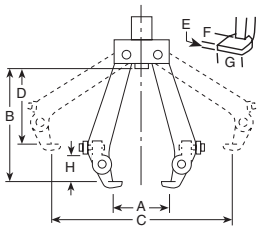

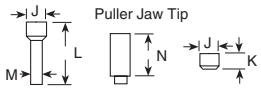

Ram extensions

Order No.	Adapter Type	Amount included w/puller	J (mm)	K (mm)	L (mm)	M (mm)	N (mm)
44745	Push	1	105	—	343	63,5	—
44766	Ext.	4	105	—	—	—	203
303045	Push	1	105	79,4	—	—	—

Order No.	Min. Spread A (mm)	Reach Min. Spread B (mm)	Max. Spread C (mm)	Reach Max. Spread D (mm)	Puller Jaw Tip E (mm)	F (mm)	G (mm)	Cylinder Height H (mm)	Vertical Stroke Adjust. (mm)	Overall Length (mm)	Max. Thickness Workpiece (mm)	Wheel Dia. (mm)	Power Source Requirements
PH1002-E220	381	1.067	1.219	864	25,4	57,1	127	260	305-914	2.388	305	260	220 V, 50 Hz, 13 Amp Cap.
PH1002J	381	1.067	1.219	864	25,4	57,1	127	260	305-914	2.388	305	260	—

Roller Bearing
PULLER/INSTALLER

(Railroad Edition)
100 Ton Pulling Capacity

BEARING MAINTENANCE

- Quickly remove or install tapered roller bearings.
- Designed with cooperation of major bearing manufacturers.
- It's a fast, simple, one-man operation with 100-tons of pulling force provided.
- Completely portable for easy, convenient positioning and out-of-the-way storage.
- The standard in most wheel shops.

CE

Universal railroad axle journal roller bearing puller/installer – For years, the standard in most wheel shops. Power Team now has four models to choose for greater flexibility. With both sling and jack models available and two pumps to choose from, you can tailor the unit to match your needs. With the proper equipment and know-how, removal and installation of axle journal roller bearings takes an absolute minimum of time and effort.

Each unit will service a full line of bearings with rotating end caps, from class B thru GG. No other method can match Power Team's simplicity. Removal is very easy. Simply remove the end caps, slip the pulling shoe between the bearings and the wheel, actuate the pump, and in seconds, 100 tons of pulling force removes the bearing. Installation is just as easy! Each unit is CSA certified (LR19814) and comes complete with a heavy-duty 100-ton hydraulic cylinder, 10,000 P.S.I. (700 bar) pump with remote control solenoid valve, hydraulic pressure gauge (No. 11543), a pulling shoe and installing tube.

Our roller bearing pullers are ideal for replacing tough, worn-out bearings on RR freight cars.

The photo above shows the Universal Puller in position on the roller bearing assembly, which is ready for removal.

Order No.	Model Type	Cylinder Type	Valve Type	Pump Information kW	Phase	Voltage
PR2100J-E220 †	Jack	Double Acting	Solenoid	1,5**	1	230*
PR3100J-E380 †	Jack	Double Acting	Solenoid	2,2	3	400*
PR2100S-E220 †	Sling	Double Acting	Solenoid	1,5	1	230*
PR3100S-E380 †	Sling	Double Acting	Solenoid	2,2	3	400*

* Prewired at factory for this voltage. Other voltages available upon request.
** The 1,49 Kw, 115 volt requires 30 amp service.

Tooling order information - IMPORTANT...This tooling chart applies only to standard AAR configurations for freight care applications. In order to provide adapters needed to service housing-type locomotive and passenger car bearings, as well as metric bearings, Power Team must be provided with the following information: bearing manufacturer's name and general arrangement drawing number, size of bearing to be serviced, railroad name and location and part numbers of adapters already in your possession if you currently own a Puller/Installer.

Tool Description	Class and size of bearing assembly TBU & SP "Metric Tooling" 120	130	140	150
Pulling Shoe Insert Adapter	No. 351830	No. 30512	No. 30521	No. 30520
Guide Tube & Cap Screw Assembly	No. 253341	No. 253342	No. 253343	No. 253344
Cap Screw**	No. 253339	No. 253394	No. 253339	No. 253395
Guide Tube Adapter	No. 21247	No. 21247	No. 21247	No. 21247
Installing Tube Adapter Ring	No. 253335	No. 253336	No. 253337	No. 253338

** Screws are supplied with the guide tube and should be ordered as replacements only.

PR3100J

PR3100S

Tool Description	Class B 108 x 203 (No.)	Class C 127 x 229 (No.)	Class D 140 x 254 (No.)	Class E 152 x 279 (No.)	Class EE 140 Axle. (No.)	Class EE 152 Axle. (No.)	Class F 165 x 305 (No.)	Class G 178 x 305 (No.)	Class G 165 Axle. (No.)	Class GG 165 Axle. (No.)
	Class and size of bearing assembly to be serviced									
Pulling Shoe	No. 420845 is included as part of basic machine – Do Not Order							420846	420846	420846
Pulling Shoe Insert Adapter	30522	30512	30521	30520	30520	30519	30519	—	—	—
Guide Tube & Cap Screw Assembly	253313	253314	253317	253318	253316	253327	253320	253321	253319	253323
Cap Screw**	253156	253349	253308	253155	253307	253308	253310	253326	253309	253309
Guide TubeNo. Adapter	23934	21248	21248	21247	21247	21247	21247	21247	21247	21247
Installing Tube	No. 30416 is included as part of basic machine – Do Not Order							30417	30417	30417
Installing Tube Adapter Ring	21242	21258	21256-1	21255-1	21255-1	21257-1	21257-1	30586	30585	30585

Note: Adapters listed above are for servicing the following roller bearing assemblies: Brenco "Crown-Taper", New Departure-Hyatt "Hy-Roll Taper", SKF "Expediter" and Timken "AP".

** Screws are supplied with the guide tube and should be ordered as replacements only.

PR2100J/PR3100J

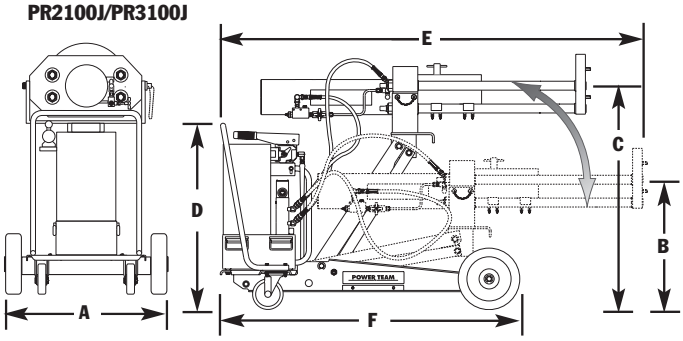

PR2100S/PR3100S

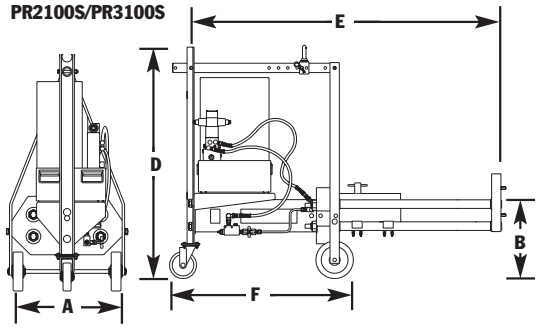

Order No.	Stroke (mm)	Capacity Pull (Tons)	Capacity Inst. (Tons)	Speed Advance (mm/min.)	Speed Pull (mm/min.)	Speed Inst. (mm/min.)	A (mm)	B (mm)	C (mm)	D (mm)	E (mm)	F (mm)	Weight (kg)
PR2100J	394	100	68	900	81	113	813	383	1.059	912	1.981	1.493	528
PR3100J	394	100	68	900	81	113	813	383	1.059	912	1.981	1.493	520
PR2100S	394	100	68	900	81	113	619	279	—	1.283	1.632	985	455
PR3100S	394	100	68	900	81	113	619	279	—	1.283	1.632	985	458

Drivers

Bearing, Bushing And Seal

27797 Master Set
(Board not included)

No. 27793
Starter Set

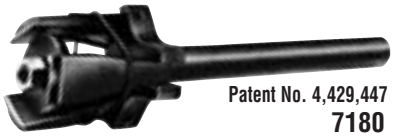

Patent No. 4,429,447
7180

Universal bearing cup installer

This installer adjusts to fit bearing cups from 92 to 165 mm O.D. Replaces over two dozen plates and drivers. Simply adjust the jaws to fit the cup I.D., lock the jaws, slip the new cup on and drive it home with a hammer. Will not damage new bearings.

No. 7180 – Univ. bearing cup installer. Wt., 4,5 kg.

Assemble your own "custom-made" driver tools

These sets include discs and handles for custom seal driver assembly to provide a pilot (to prevent cocking), a spacer (so force is applied on the proper area) and a driver (for even force dist.). Discs range from 12,7 thru 114,3 mm diameters in 1,6 mm increments. Each set includes a handy plastic box with pre-cut tool tray.

No. 27793 – Starter Set. Contains handle and discs especially selected to provide the driver sizes most frequently needed. Maximum utility at a modest investment! Wt.,1,8 kg.

No. 27794 – Basic Set. Wide coverage, low investment! Includes 41 discs and two handles. Size range: 12,7 thru 76,2 mm diameter. Wt., 10 kg.

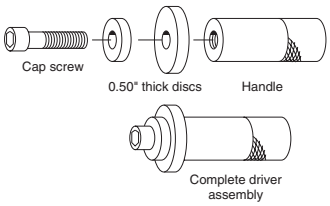

No. 27795 – Big Job Set. Used for servicing large components. You get coverage of 77,8 thru 114,3 mm diameter with the 24 discs and handle provided. Wt., 20,4 kg.

No. 27797 – Master Set. For maximum coverage. Three handle sizes and all 65 discs listed in chart at left are included. Range: 12,7 thru 114,3 mm diameter. Wt., 30,9 kg.

No. 212377 – Tool organizer board. Will accommodate all components of 27793 Starter Set. Tools not included. Wt., 2,3 kg.

These sets have the proper-size driver for any seal, bearing or bushing installing job. Select the proper-size discs, attach to handle with cap screws and strike with hammer.

Order No.	DISCS Inch	MM	Order No.	DISCS Inch	MM	Order No.	DISCS Inch	MM
27492	9/16	14.3	27513†	1 7/8	47.6	27535	3 1/4	82.6
27493†	5/8	15.9	27514	1 15/16	49.2	27536	3 5/16	84.1
27494	11/16	17.5	27515	2	50.8	27537	3 3/8	85.7
27495†	3/4	19.0	27516	2 1/16	52.4	27538	3 7/16	87.3
27496	13/16	20.6	27517	2 1/8	54.0	27539	3 1/2	88.9
27497†	7/8	22.2	27518	2 3/16	55.6	27540	3 9/16	90.5
27498	15/16	23.8	27519	2 1/4	57.2	27541	3 5/8	92.1
27499†	1	25.4	27520	2 5/16	58.7	27542	3 11/16	93.7
27500	1 1/16	27.0	27521	2 3/8	60.3	27543	3 3/4	95.3
27501†	1 1/8	28.6	27522	2 7/16	61.9	27544	3 13/16	96.8
27502	1 3/16	30.2	27523	2 1/2	63.5	27545	3 7/8	98.4
27503†	1 1/4	31.8	27524	2 9/16	65.1	27546	3 15/16	100.0
27504	1 5/16	33.3	27525	2 5/8	66.7	27547	4	101.6
27505†	1 3/8	34.9	27526	2 11/16	68.3	27548	4 1/16	103.2
27506	1 7/16	36.5	27527	2 3/4	69.8	27549	4 1/8	104.8
27507†	1 1/2	38.1	27528	2 13/16	71.4	27550	4 3/16	106.4
27508	1 9/16	39.7	27529	2 7/8	73.0	27551	4 1/4	108.0
27509†	1 5/8	41.3	27530	2 15/16	74.6	27552	4 5/16	109.5
27510	1 11/16	42.9	27531	3	76.2	27553	4 3/8	111.1
27511†	1 3/4	44.4	27532	3 1/16	77.8	27554	4 7/16	112.7
			27533	3 1/8	79.4	27555	4 1/2	114.3

† = Items contained in 27793 starter set.

SET COMPONENTS

Order No.	Description
10012†	1/4"-20 UNC X 22,2mm*
10020†	1/4"-20 UNC X 31,8 mm*
10854†	1/4"-20 UNC X 44,5 mm
10855†	1/4"-20 UNC X 70 mm*
12001†	1/4"-20 UNC X 2 1/4"*
27487†	Small Handle 127 X19mm Dia.
27488	Med. Handle 152 X 41mm Dia.
27489	Large Handle 152 X 41mm Dia.
27490	Extension Tube
7350†	Allen Wrench

SELECTING A PUNCH

The following information is provided as a convenient general reference guide for metal punching operations.

HOLE SIZE VS. MATERIAL THICKNESS

Punching holes in metal is the fast, economical way to get precise hole size, smoothness and minimum burr. Compressive strength of the punch steel determines that the thickness of the metal being punched must not exceed the diameter of the punch. This relationship varies with the type of material. For example: the minimum hole diameter will be 6,4 mm in 6,4 mm mild steel, 6,4 mm in 4,8 mm stainless steel, and 6,4 mm in 7,9 mm aluminum.

MAXIMUM RATED CAPACITY

All punching tools have their maximum capacity for safe, dependable operation over a long life span. The hydraulic punches listed in this catalog have a "rated capacity" based on their design strength. Before selecting a tool, use the following charts to determine the specific tonnage required to punch the size and shape holes through the type and gauge metal considered.

DETERMINING TONNAGES FOR ROUND HOLES

To determine tonnages for hot rolled mild steel (typically used in bar size angle iron, channels, tees and zees) with a 3.500 bar shear strength, read directly from chart #1. Example: To punch a 9,5 mm diameter hole thru 9,5 mm thick mild steel, chart #1 shows 11.1 tons are required. For ASTM A-36 steel (typically used for structural size wide flange, H and I beams, tees and zees) with a 4.200 bar shear strength, read direct from chart #2. Example: To punch a 6,4 mm round hole in 6,4 mm thick A-36 steel, chart #2 shows 5.9 tons of force is needed.

CHART #1 — TONS OF PRESSURE REQUIRED TO PUNCH MILD STEEL

Material Thickness		Round Hole Diameter (mm)											
		3,2	4,8	6,4	7,9	9,5	11,1	12,7	14,3	15,9	17,5	19	20,6
Gauge	(mm)												
20	1/32	.4	.5	.7	.9	1.1	1.2	1.4	1.6	1.8	1.9	2.1	2.3
18	3/64	.5	.7	.9	1.2	1.4	1.6	1.9	2.1	2.4	2.6	2.8	3.1
16	1/16	.6	.9	.6	1.5	1.8	2.1	2.3	2.6	2.9	3.2	3.5	3.8
14	5/64	.7	1.1	1.2	1.8	2.2	2.6	2.9	3.3	3.7	4.0	4.4	4.8
12	7/64	1.0	1.5	1.5	2.6	3.1	3.6	4.1	4.6	5.1	5.7	6.2	6.7
11	1/8	1.2	1.8	2.1	2.9	3.5	4.1	4.7	5.1	5.9	6.2	7.1	7.6
10	9/64	1.3	2.0	2.4	3.3	4.0	4.6	5.3	5.9	6.6	7.3	7.9	8.6
3/16"	3/16	—	2.8	2.6	4.6	5.5	6.4	7.4	8.3	9.2	10.1	11.0	12.0
1/4"	1/4	—	—	3.7	6.1	7.4	8.6	9.8	11.1	12.3	13.5	14.7	16.0
5/16"	5/16	—	—	4.9	7.8	9.2	10.7	12.3	13.9	15.4	17.0	18.5	20.0
3/8"	3/8	—	—	—	—	11.1	12.8	14.8	16.5	18.5	20.2	22.1	23.8
1/2"	1/2	—	—	—	—	—	—	19.7	22.0	24.6	26.9	29.5	31.8

TONS OF PRESSURE

CHART #2 — TONS OF PRESSURE REQUIRED TO PUNCH ASTM-A36 STRUCTURAL STEEL

Material Thickness		Round Hole Diameter (mm)											
		3,2	4,8	6,4	7,9	9,5	11,1	12,7	14,3	15,9	17,5	19	20,6
Gauge	(mm)												
12	7/64	1.2	1.9	2.5	3.1	3.7	4.3	4.9	5.6	6.2	6.8	7.4	8.0
11	1/8	1.4	2.1	2.8	3.5	4.2	4.9	5.7	6.4	7.1	7.8	8.5	9.2
10	9/64	—	2.4	3.2	4.0	4.8	5.6	6.4	7.2	7.9	8.7	9.5	10.3
3/16"	3/16	—	3.3	4.4	5.5	6.6	7.7	8.8	9.9	11.0	12.1	13.2	14.3
1/4"	1/4	—	4.4	5.9	7.4	8.6	10.3	11.8	13.2	14.7	16.2	17.7	19.1
5/16"	5/16	—	—	7.4	9.2	11.0	12.9	14.7	16.5	18.4	20.2	22.0	24.0
3/8"	3/8	—	—	8.8	11.0	13.3	15.5	17.7	19.9	22.1	24.3	26.5	28.7
1/2"	1/2	—	—	—	—	—	—	23.6	26.5	29.4	32.4	35.3	38.3

TONS OF PRESSURE

CHART #3 TONS OF PRESSURE REQUIRED TO SHEAR 25,4 MM LENGTH

Material Thickness	Mild Steel	Stainless Steel	Brass
4,8 mm	0,167	0,276	0,128
6,4 mm	0,246	0,374	0,177
7,9 mm	0,314	0,472	0,216
9,5 mm	0,373	0,560	0,246
11,1 mm	0,432	0,649	0,305
12,7 mm	0,491	0,737	0,344

TONS OF PRESSURE

DETERMINING TONNAGES FOR IRREGULAR SHAPED HOLES

When punching irregular shaped holes (square, obround, etc…) multiply the length of metal to be cut by the multiplier given for a 25,4 mm length of cut in chart #3. Example: The shear length (or total distance around a 12,7 mm square hole) is 50,8 mm. To punch such a hole in 6,4 mm thick mild steel, multiply 50,8 mm x 6.25 (from chart #3) = 12.5 tons. For stainless steel this would be 50,8 mm x 9.5 = 19 tons.

DIE CLEARANCE

The relationship of the larger die hole size to the punch size is die clearance and is stated as a percentage of the thickness of the material being punched. The range of clearances varies from 10% for thin materials to 20% for thicker materials. For 19 mm material, the total die clearance is 3,8 mm. Clearance should always be specified when there is any reason for doubt.
Effects of die clearance are more noticeable in thicker materials (such as 12,7 mm) than in thinner materials (such as 4,8 mm). When ordering die sets, specify the type and thickness of material being punched (see chart #4).

CHART #4 CLEARANCE FOR MILD STEEL

Material Thickness	Approximate Decimal Thickness	Overall Clearance– Add to Punch Size
7 Gauge	4,55	0,5 mm
3/16	4,76	0,58 mm
1/4	6,35	0,94 mm
5/16	7,94	1,2 mm
3/8	9,5	1,45 mm
1/2	12,7	1,90 mm

TONS OF PRESSURE

NOTE: Most grades of half hard aluminum use the same clearance as shown above. In many cases, your own experience may dictate that you call for clearances different from the above, especially when punching other materials such as stainless steel. Special clearances may be ordered for that purpose.

DIE CLEARANCE HAS THE FOLLOWING EFFECTS:

Too much clearance	Too little clearance	Correct Clearance
1. Extra roll-in at top of the hole. 2. Too much burr at bottom of the hole.	1. More punching pressure needed. Can reduce tool life. 2. High stripping force causes part distortion and extra punch wear.	1. Straighter hole thru material. 2. Minimum distortion at top of hole. 3. Minimum burr at bottom of hole.

USE THE 200.300 OR 750 L/MIN TESTER TO SIMULATE ACTUAL OPERATING CONDITIONS OF THE SYSTEM UNDER TEST

Testing the pump: Operator runs engine at a specific rpm and adjusts tester's pressure compensating valve to simulate a work load. By comparing meter readings with manufacturer specs, proper operation of pump can be confirmed. If oil flow and pressure do not meet specs, the pump is faulty. Or, if test results and specifications agree, the operator will know that the problem is elsewhere in the system and that other tests must be performed. Regardless of the component being tested, hook-up and testing is accomplished in minutes. NOTE: These hydraulic testers should always be used with the owner's manual/manufacturers' specifications for the system under test.

BASE MOUNTING HOLES FOR "C"CYLINDERS

Cylinder Tonnage	No. Holes	Thread Size	Thread Depth (mm)	Bolt Circle Diameter (mm)
5	2†	¼-20	9.5	25.4
10		5/16-18	12.7	39.7
15		⅜-16		47.6
25		½-13	19.1	58.7
55				95.3
***Optional 75**	4	¾-10	25.4	114.3
***Optional 100**		1-8		120.7

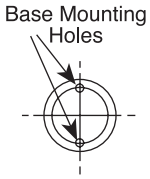

* *Consult Factory (45° from coupler)*
† *90° from coupler.*

Cyl. Caps furnished with "C" Series Cylinders:

5 ton cylinders	**No. 201375**
10 ton cylinders	**No. 201362**
15 ton cylinders	**No. 201362**
25 ton cylinders	**No. 201412**
55 ton cylinders	**No. 36161**
75 ton cylinders	**No. 36161**
100 ton cylinders	**No. 36161**

PERFORMANCE

The table at right gives you an idea of what to expect when coupling RD series cylinders to a Power Team pump. Actual performance will vary according to job conditions.

Pump	Cylinder	Time to Extend Cylinder 25,4 mm	
		7 bar	700 bar
PE55	RD55	1.0 sec.	12.0 sec.
	RD100	1.8 sec.	22.5 sec.
	RD200	3.5 sec.	45.0 sec.
	RD400	7.2 sec.	85.0 sec.
PQ120 Series	RD200	3.4 sec.	20.6 sec.
	RD300	4.9 sec.	30.0 sec.
	RD400	6.4 sec.	39.0 sec.
	RD500	8.1 sec.	49.5 sec.
PE400 Series	RD300	3.0 sec.	8.5 sec.
	RD400	3.9 sec.	11.1 sec.
	RD500	4.9 sec.	14.1 sec.

NOTE: Base mounting holes are standard on all RD cylinders.Orientation of base mounting holes to coupler. Orientation on RD300, RD400 & RD500 series is random.

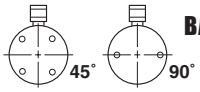

BASE MOUNTING HOLES FOR "RD" CYLINDERS

Tonnage	10	25	55	80	100	150	200	300	400	500
No. of Holes	2	4	4	4	4	4	4	4	4	6
Thread Size	3/8"-16	1/2"-13	5/8"-11	5/8"-11	3/4"-10	1"-8	1 1/4"-7	1 1/4"-7	1 1/2"-12	1 3/8"-12
Depth (mm)	16	19	22	22	25	25	32	44	48	51
B.C. Dia.	51	70	89	114	140	152	165	159	184	203
Orientation	90°	45°	45°	45°	45°	45°	45°	Random	Random	Random

MOUNTING HOLES FOR "RLS" CYLINDERS

RLS50	8,6 mm C'bore x 6,4 mm deep, 5,6 mm thru hole
RLS100	10,7 mm C'bore x 8,7 mm deep, 7,1 mm thru hole

RLS200	15,5 mm C'bore x 10,4 mm deep,10,4 mm thru hole
RLS300	15,5 mm C'bore x 11,2 mm deep, 10,4 mm thru hole

RLS500S	17,8 mm C'bore x 12,7 mm deep,11,9 mm thru hole
RLS750S	20,3 mm C'bore x14,2 mm deep, 13,5 mm thru hole

RLS1000S	20,3 mm C'bore x 14,2 mm deep, 13,5 mm thru hole
RLS1500S	20,6 mm C'bore x 14,2 mm deep, 13,5 mm thru hole

POST TENSION/STRESSING JACK DIMENSIONS

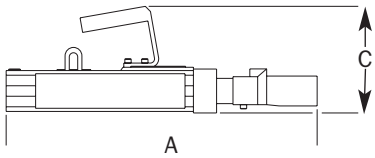

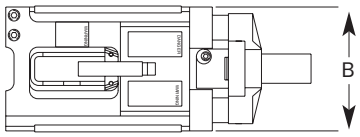

Order Number	A (mm)	B (mm)	C (mm)	Weight (kg)
SJ2010	533	229	165	25
SJ2010	559	259	178	34
SJ3010	559	259	178	34
SJ3010P	559	259	178	34
SJ2010DA	470	190	165	19
SJ3010DA	470	216	165	23

Conversion
FORMULAS

RESOURCES

DECIMAL & MILLIMETER EQUIVALENTS

	DECIMALS	MILLIMETERS
1/64	.015625	— 0.397
1/32	.03125	— 0.794
3/64	.046875	— 1.191
1/16	.0625	— 1.588
5/64	.078125	— 1.984
3/32	.09375	— 2.381
7/64	.109375	— 2.778
1/8	.1250	— 3.175
9/64	.140625	— 3.572
5/32	.15625	— 3.969
11/64	.171875	— 4.366
3/16	.1875	— 4.763
13/64	.203125	— 5.159
7/32	.21875	— 5.556
15/64	.234375	— 5.953
1/4	.2500	— 6.350
17/64	.265625	— 6.747
9/32	.28125	— 7.144
19/64	.296875	— 7.541
5/16	.3125	— 7.938
21/64	.328125	— 8.334
11/32	.34375	— 8.731
	DECIMALS	MILLIMETERS
23/64	.359375	— 9.128
3/8	.3750	— 9.525
25/64	.390625	— 9.922
13/32	.40625	— 10.319
27/64	.421875	— 10.716
7/16	.4375	— 11.113
29/64	.453125	— 11.509
15/32	.46875	— 11.906
31/64	.484375	— 12.303
1/2	.5000	— 12.700
33/64	.515625	— 13.097
17/32	.53125	— 13.494
35/64	.546875	— 13.891
9/16	.5625	— 14.288
37/64	.578125	— 14.684
19/32	.59375	— 15.081
39/64	.609375	— 15.478
5/8	.6250	— 15.875
41/64	.640625	— 16.272
21/32	.65625	— 16.669
43/64	.671875	— 17.066
11/16	.6875	— 17.463
	DECIMALS	MILLIMETERS
45/64	.703125	— 17.859
23/32	.71875	— 18.256
47/64	.734375	— 18.653
3/4	.7500	— 19.050
49/64	.765625	— 19.447
25/32	.78125	— 19.844
51/64	.796875	— 20.241
13/16	.8125	— 20.638
53/64	.828125	— 21.034
27/32	.84375	— 21.431
55/64	.859375	— 21.828
7/8	.8750	— 22.225
57/64	.890625	— 22.622
29/32	.90625	— 23.019
59/64	.921875	— 23.416
15/16	.9375	— 23.813
61/64	.953125	— 24.209
31/32	.96875	— 24.606
63/64	.984375	— 25.003
1	1.000	— 25.400

1 mm = .03937"
.001" = .0254 mm

SI* CONVERSION FORMULAS

APPROXIMATE CONVERSION

MULTIPLY SI* UNIT	BY CONV FACTOR		TO GET OR MULTIPLY NON-SI UNIT	BY CONV FACTOR		TO GET SI* UNIT
LENGTH						
millimeter (mm) (1 inch = 25.4 mm exactly)	X	0.03937	= inch	X 25.4	=	mm
centimeter (cm) 10 mm	X	0.3937	= inch	X 2.54	=	cm
meter (m) 1000 mm	X	3.28	= foot	X 0.305	=	m
meter (m)	X	1.09	= yard	X 0.914	=	m
kilometer (km) 1000 m	X	0.62	= mile	X 1.61	=	km
AREA						
millimeter^2 (mm^2)	X	0.00155	= inch^2	X 645	=	mm^2
centimeter^2 (cm^2)	X	0.155	= inch^2	X 6.45	=	cm^2
meter^2 (m^2)	X	10.8	= foot^2	X 0.0929	=	m^2
meter^2 (m^2)	X	1.2	= yard^2	X 0.836	=	m^2
hectare (ha) 10,000 m^2	X	2.47	= acre	X 0.405	=	ha
kilometer^2 (km^2)	X	0.39	= mile^2	X 2.59	=	km^2
VOLUME						
centimeter^3 (cm^3)	X	0.061	= inch^3	X 16.4	=	cm^3
liter (l)	X	61	= inch^3	X 0.016	=	l
milliliter (ml) ml = 1 cm^3)	X	0.034	= oz-liq	X 29.6	=	ml (1
liter (l) 1000 ml	X	1.06	= quart	X 0.946	=	l
liter (l)	X	0.26	= gallon	X 3.79	=	l
meter^3 (m^3) 1000 l	X	1.3	= yard^3	X 0.76	=	m^3
MASS						
gram (g)	X	0.035	= ounce	X 28.3	=	g
kilogram (kg) 1000 g	X	2.2	= pound	X 0.454	=	kg
metric ton (t) 1000 kg	X	1.1	= ton (short)	X 0.907	=	t

APPROXIMATE CONVERSION

MULTIPLY SI* UNIT	BY CONV FACTOR		TO GET OR MULTIPLY NON-SI UNIT	BY CONV FACTOR		TO GET SI* UNIT
FORCE (N = kg • m/s2)						
newton (N)	X	0.225	= pound	X 4.45	=	N
kilonewton (kN)	X	225	= pound	X 0.00445	=	kN
TORQUE						
newton meter (N•m)	X	8.9	= lb. in.	X 0.113	=	N•m
newton meter (N•m)	X	0.74	= lb. ft.	X 1.36	=	N•m
PRESSURE (Pa = N/m2)						
kilopascal (kPa)	X	4.0	= in. H_2O	X 0.249	=	kPa
kilopascal (kPa)	X	0.30	= in. Hg	X 3.38	=	kPa
kilopascal (kPa)	X	0.145	= p.s.i.	X 6.89	=	kPa
megapascal (MPa)	X	145	= p.s.i.	X 0.00689	=	MPa
Bar	X	14.5	= p.s.i.	X .0689	=	Bar
POWER (w = J/s)						
kilowatt (kw)	X	1.34	= hp	X 0.746	=	kw
kilowatt (kw)	X	0.948	= Btu/s	X 1.055	=	kw
watt (w)	X	0.74	= ft. lb/s	X 1.36	=	w
TEMPERATURE						
°C = (°F - 32) ÷ 1.8	°F = (°C X 1.8) + 32					
FLOW						
cu. cm./min. cm./min.	X	.061	= cu. in/min.	X 16.4	=	cu.
liters/min.	X	.2642	= GPM	X 3.785	=	liters/min.

* System International (Modern Metric System)

Standards

Power Team's commitment to quality is evident in everything we do, from raw material receipt to how we support our customers years after they purchase our products. Power Team is registered to ISO 9001: 2000 international quality standard. ISO 9001: 2000 requires compliance with standards for management, administration, product development, manufacturing and continual improvement.

Our Registration verifies that Power Team has adopted and maintains documentation for processes ranging from suppliers to customers, inspection, handling, and training. ISO 9001 also requires periodic internal and external audits to ensure all aspects of work affecting quality control are monitored. This always has been, and will continue to be, our philosophy. That's our guarantee to you.

ISO 9001 CERTIFIED

ASME B30.1

Power Team hydraulic cylinders fully comply with the criteria set forth in the American Society of Mechanical Engineers standard ASME B30.1:

1. Our cylinders are designed to have a minimum of a 2-to-1 safety factor on typical material yield strength;

Each cylinder is tested at 125 percent of rated pressure at full travel and is inspected to assure functionality and freedom from leaks.

ASME B40.1

Power Team heavy-duty pressure gauges are designed in accordance with the recommendations set forth in the American Society of Mechanical Engineers standard ASME B40.1, Grade B.

CE MARK

Power Team is committed to designing, manufacturing, and marketing products that meet or exceed the needs of the customers we serve. Power Team supplies a Letter of Incorporation or a Declaration of Conformity and CE Marking for products that conform with European community directives.

IJ100

Power Team hoses meet the criteria set forth in the Material Handling Institute's specification #IJ100 for hydraulic hose. Under the procedures outlined in this standard, hydraulic hose shall:

1. Have an average minimum life of 30,000 cycles at full rated capacity.

2. Have a minimum burst pressure of at least twice the rated operating pressure.

LR19814

CSA

Where specified, Power Team electric power pump assemblies meet the design, assembly, and test requirements of the Canadian Standards Association. Note: If CSA certification is required, it must be requested at the time the pump is ordered.

NEMA

Where specified, Power Team electric power pump assemblies meet the design, assembly, and test requirements of NEMA 12, a National Electrical Manufacturers' Association standard relating to electrical components used to resist moisture and dust.

POWER TEAM PRODUCT DESIGN CRITERIA

All Power Team brand hydraulic components are designed and/or tested to be safe for use at maximum operating pressures of 700 bar unless otherwise specifically noted.

QUALITY ASSURANCE

All of our hydraulic cylinders are subjected to quality checks during production. All steel bar is certified and has material traceability to the mill. Before leaving the factory, all cylinders are pressure tested to 875 bar, except the RT series which are tested to 700 bar to insure on-the-job reliability. We have made every effort to include the latest specifications for our products in this catalog. Please call the Power Team factory for the most current product specifications. The Power Team Lifetime Marathon Warranty is described in more detail on pgs. 240-241 of this catalog.

Warranty

LIFETIME MARATHON™ WARRANTY

EFFECTIVE 4-1-84

All Power Team products and parts with the exception noted below, are warranted against defects in materials and workmanship for the life of the product or part. (The life of the product or part is defined as that point in time when it no longer functions due to normal wear.) This warranty does not cover any product or part that has been worn out, abused, heated, ground or otherwise altered, used for a purpose other than that for which it was intended, or used in a manner inconsistent with any instructions regarding its use. Chains, batteries, electric motors, gas engines, knives and cutter blades which are sold with Power Team products are not covered by this warranty. All electric motors and gas engines are separately warranted by their manufacturer under the conditions stated in their separate warranty.

Power Team's electronic products are warranted against defects in material and workmanship for one year.

To qualify for warranty consideration, return the Power Team product, freight prepaid, to a Power Team authorized repair center or to the Power Team factory. If any product or part manufactured by Power Team is found to be defective by Power Team, in its sole judgement, Power Team will, at its option, either repair or replace such defective product or part and return it via best ground transportation, freight prepaid.

THIS REMEDY SHALL BE THE EXCLUSIVE REMEDY AVAILABLE FOR ANY DEFECTS IN THE PRODUCTS OR PARTS MANUFACTURED AND SOLD BY POWER TEAM OR FOR DAMAGES RESULTING FROM ANY OTHER CAUSE WHATSOEVER, INCLUDING WITHOUT LIMITATION, POWER TEAM'S NEGLIGENCE. POWER TEAM SHALL NOT, IN ANY EVENT, BE LIABLE TO ANY BUYER FOR CONSEQUENTIAL OR INCIDENTAL DAMAGES OF ANY KIND, WHETHER FOR DEFECTIVE OR NON-CONFORMING GOODS, NEGLIGENCE, ON THE BASIS OF STRICT LIABILITY, OR FOR ANY OTHER REASON.

Power Team's warranty is expressly limited to persons who purchase Power Team's products or parts for the resale or use in the ordinary course of the buyer's business.

THIS WARRANTY IS EXCLUSIVE, AND POWER TEAM MAKES NO OTHER WARRANTY OF ANY KIND WHATSOEVER, EXPRESSED OR IMPLIED, WITH RESPECT TO THE PRODUCTS MANUFACTURED AND SOLD BY IT, WHETHER AS TO MERCHANTABILITY, FITNESS FOR A PARTICULAR PURPOSE, OR ANY OTHER MATTER. No agent, employee or representative of Power Team has any authority to bind Power Team to any affirmation, representation, or warranty concerning Power Team products or parts, except as stated herein.

The purpose of this exclusive remedy shall be to provide the buyer with repair or replacement of products or parts manufactured by Power Team found to be defective in materials or workmanship or negligently manufactured. This exclusive remedy shall not be deemed to have failed of its essential purpose so long as Power Team is willing and able to replace said defective products or parts in the prescribed manner.

Warranty effective 4-1-84

Copies of this warranty are available from the factory upon request.

Selection Guide

Torque Wrench Selection Guide

BOLT - TORQUE						TOOL GUIDELINE			
						RECOMMENDED MODEL			
SAE1 SAE 2 30,000 PSI	ASTM 193 B7 BOLT	8-7 A/F HEAVY HEX NUT	ASTM 354 B8 60000 PSI	FT. LBS.	Nm	SQUARE DRIVE MAKE-UP ONLY	LIMITED CLEARANCE MAKE-UP	SQUARE DRIVE BREAK OUT	LIMITED CLEARANCE BREAK OUT
1”	7/8”	1-7/16”		**300**	**408**	TWSD1	TWLC2	TWSD1	TWLC2
1-1/8”	1”	1-5/8”	7/8”	**425**	**578**	TWSD1	TWLC2	TWSD1	TWLC2
				500	**680**	TWSD1	TWLC2	TWSD1	TWLC2
1-1/4”			1”	**600**	**816**	TWSD1	TWLC2	TWSD1	TWLC2
1-3/8”	1-1/8”	1-13/16”		**700**	**952**	TWSD1	TWLC2	TWSD1	TWLC2
	1-1/4”	2”	1-1/8”	**800**	**1,088**	TWSD1	TWLC2	TWSD3	TWLC4
1-1/2”				**900**	**1,224**	TWSD1	TWLC2	TWSD3	TWLC4
				1,000	**1,360**	TWSD1	TWLC2	TWSD3	TWLC4
1-5/8”	1-3/8”	2-3/16”	1-1/4”	**1.250**	**1,700**	TWSD1	TWLC2	TWSD3	TWLC4
				1,350	**1,836**	TWSD1	TWLC2	TWSD3	TWLC4
	1-1/2”	2-3/8”	1-3/8”	**1,500**	**2,040**	TWSD3	TWLC2	TWSD3	TWLC4
1-3/4”				**1,600**	**2,176**	TWSD3	TWLC4	TWSD6	TWLC4
1-7/8”				**1,800**	**2,448**	TWSD3	TWLC4	TWSD6	TWLC4
	1-5/8”	2-9/16”		**2,000**	**2,720**	TWSD3	TWLC4	TWSD6	TWLC4
2”				**2,200**	**2,992**	TWSD3	TWLC4	TWSD6	TWLC8
	1-3/4”	2-3/4”	1-5/8”	**2,600**	**3,536**	TWSD3	TWLC4	TWSD6	TWLC8
2-1/4”				**3,000**	**4,080**	TWSD3	TWLC4	TWSD6	TWLC8
	1-7/8”	2-15/16”	1-3/4”	**3,700**	**5,032**	TWSD6	TWLC4	TWSD11	TWLC8
2-1/2	2”	3-1/8”		**4,000**	**5,440**	TWSD6	TWLC8	TWSD11	TWLC15
”			1-7/8	**4,400**	**5,984**	TWSD6	TWLC8	TWSD11	TWLC15
2-3/4”			2”	**5,100**	**6,936**	TWSD6	TWLC8	TWSD11	TWLC15
	2-1/4”	3-1/2”		**6,000**	**8,160**	TWSD6	TWLC8	TWSD25	TWLC15
3”		3-7/8”	2-1/4”	**7,000**	**9,520**	TWSD11	TWLC8	TWSD25	TWLC15
	2-1/2”			**8,000**	**10,880**	TWSD11	TWLC15	TWSD25	TWLC30
3-1/4”				**9,000**	**12,240**	TWSD11	TWLC15	TWSD25	TWLC30
3-1/2”	2-3/4”	4-1/4”	2-1/2”	**10,000**	**13,600**	TWSD11	TWLC15	TWSD25	TWLC30
				11,500	**15,640**	TWSD25	TWLC15	TWSD25	TWLC30
3-3/4”	3”	4-5/8”	2-3/4”	**13,000**	**17,680**	TWSD25	TWLC15	PLEASE INQUIRE	TWLC30
4”				**14,500**	**19,720**	TWSD25	TWLC15	PLEASE INQUIRE	
				15,500	**21,080**	TWSD25	TWLC30	PLEASE INQUIRE	
	3-1/4”	5”	3”	**16,500**	**22,440**	TWSD25	TWLC30	PLEASE INQUIRE	
4-1/4”				**19,500**	**26,520**	TWSD25	TWLC30	PLEASE INQUIRE	
	3-1/2”	5-3/8”	3-1/4”	**20,500**	**27,880**	TWSD25	TWLC30		
4-1/2”				**21,500**	**29,240**	TWSD25	TWLC30	FOR	
				24,500	**33,320**	TWSD25	TWLC30	HIGHER	
4-3/4”	3-3/4”	5-3/4”	3-1/2”	**25,500**	**34,680**	PLEASE INQUIRE	TWLC30	TORQUE	
6-1/2”	4-1/4”			**29,500**	**40,120**	PLEASE INQUIRE	PLEASE INQUIRE	VALUES	

POWER TEAM 150 TON RH1508 CENTER-HOLE RAMS COMBINED WITH PE174 PUMPS, MAINTAIN TENSION FOR THE SUPPORT CABLES FOR THIS BRIDGE IN SEATTLE, WASHINGTON.

Page
CYLINDERS...12-41

Page
PUMPS...42-119